Notes

STL-Member

CESI Group members are founder members of the SHORT-CIRCUIT TESTING LIAISON (STL) which has been established in 1969. STL is a forum for voluntary international cooperation of testing organizations.

CESI Group Test Documents description

Type Test Certificate of .....

Issued for type tests of high voltage products (> 1 kV_{ac}; > 1,5 kV_{dc}), which have successfully been carried out in full compliance with the relevant specifications or standards and STL Guides valid at the time of the test. The Type Test Certificate consists of documents unequivocally identifying the test object and describes all conditions under which the tests were conducted. It gives evidence of the unobjectionable behavior of the test object during the tests in line with the normative documents applied as well as of the results of successful testing.

Test Certificate of (complete / selected) Type Tests

Issued if type tests of low voltage products (< 1 kV_{ac}; < 1,5 kV_{dc}) requested by the relevant product standard were passed. For these tests the equipment under test must be clearly identified by technical description, drawings, and additional specifications.

Certificate of Design Verification

Issued for passed design verification tests according to IEC 61439. For these tests the equipment under test must be clearly identified by technical description, drawings, and additional specifications.

Type Test Report

Issued for high and low voltage products if parts of selected type tests have been passed; those shall be carried out in full compliance with the relevant standards but (for high voltage products) do not fulfill all STL requirements for issuing a Type Test Certificate. For these tests the equipment under test must be clearly identified by technical description, drawings, and additional specifications.

Test Report

Issued for all other tests on high and low voltage products which have been carried out according to specifications, standards and/or client instructions

On-Site Test Record

Issued as a record of results acquired during the on-site tests / measurements

Test Award

Can be additionally issued for all named types of test documents above if the tests to be referenced were passed

Lic. Abelardo Brugada
Representante Legal
Piro'y S.A.

Tests witnessed by:

Mr. Anton Potapov — Joint-Stock Company " Polymer-Apparat"
Mr. Alexander Kolychex — Joint-Stock Company " Polymer-Apparat"

Identification of the object: Requested

The Manufacturer guarantees that the tested object is manufactured according to the submitted drawings.
CESI checked that these drawings adequately represent in shape and dimensions the essential details and the parts of the tested object.
These drawings, identified by CESI and numbered B7023130 n.1 & B7024013 n.1, are annexed to this document.

The data necessary to permit repetition of the tests are contained in the document marked: -----
The reported expanded uncertainties are determined in accordance with the Publication JCGM 100 "Evaluation of measurement data – Guide to the expression of uncertainty in measurement" and are based on a standard uncertainty multiplied by a coverage factor K=2, which for a normal distribution provides a level of confidence of approximately 95%

- Voltage a.c.	: **± 3,0%**
- Residual peak voltage (impulse tests)	: **± 3,0%**
- Current a.c.	: **± 3,0%**
- Peak current (impulse tests)	: **± 3,0%**
- Time (impulse tests)	: **± 10,0%**
- Time (a.c. tests)	: **± 1,5%**

Laboratory information

Receipt date of the sample	September 2017
Test location	CESI – Via Rubattino 54 – Milan
CESI testing team	Mr. L. Podavitte, Mr. I Guacci
Test laboratory	P177 (Surge Arrester laboratory)
ODV SAP	70006781

Lic. Abelardo Brugada
Representante Legal
Piro'y S.A.

ACCREDIA
LAB N° 0030

content	page	test date
Test object characteristics	5	
Reference standard	6	
Test carried out and identification of the test object	6	
Test setting for the test	7 to 8	
Test procedure	9	
Summary of test result	10 to 12	
Instrument used for the test	13	September 18, 2017
Technical data	14	

Pages annexed:

Client's drawing (arrester section assembled in thermal model) ; CESI n. B7023130– n.1 page
Client's drawing (complete arrester) ; CESI n. B7024013– n.1 page
Client's drawing (MO resistor) ; CESI n. B7020387 – n.1 page

Lic. Abelardo Brugada
Representante Legal
Piro'y S.A.

Rated characteristics of the tested objects assigned by the Client

Polymer-housed surge arrester

Manufacturer	**Joint-Stock Company " Polymer-Apparat"**
Type	PA-DM-54
MO resistors supplier	Joint-Stock Company " Polymer-Apparat"
Serial no.	000035
Drawing code	PA-OPN.035.001.054.01
Arrester class	Distribution
Designation	DH
Design	B
Rated voltage – U_r	54 kV
Continuous operating voltage - U_c	43,2 kV
Rated frequency	48÷62 Hz
Nominal discharge current (8/20 µs impulse shape)	10 kA
Reference current - $I_{ref.}$	1 mA
Year of manufacturer	08/2017

Polymer-housed surge arrester section assembled in thermal model

Manufacturer	**Joint-Stock Company " Polymer-Apparat"**
Type	PA-DM
MO resistors supplier	Joint-Stock Company " Polymer-Apparat"
Serial no.	000011
Drawing code	PA-DM.001.ST.01
Arrester class	Distribution
Designation	DH
Design	B
Rated voltage – U_r	**1,25 x Uc**
Continuous operating voltage - U_c	4,34 kV
Rated frequency	48÷62 Hz
Nominal discharge current (8/20 µs impulse shape)	10 kA
Reference current - $I_{ref.}$	1 mA
Year of manufacturer	08/2017

Lic. Abelardo Brugada
Representante Legal
Piro'y S.A.

ACCREDIA
LAB N° 0030

Reference Standard

IEC 60099-4 – Edition 3.0 (2014-06)– clause 8.6 & Annex B
" Metal-Oxide Surge Arresters without gaps for AC systems

Test carried out and identification of the test objects

Test carried out	Number of test objects	Test object identification
Heat dissipation behaviour of test sample	1	PA-DM-54 - s/n. 368162
	1	PA-DM (Section) - s/n. 368160

Lic. Abelardo Brugada
Representante Legal
Piro'y S.A.

ACCREDIA
LAB N° 0030

Test setting for the test

Photo no. 1

Complete arrester

Lic. Abelardo Brugada
Representante Legal
Piro'y S.A.

ACCREDIA
LAB N° 0030

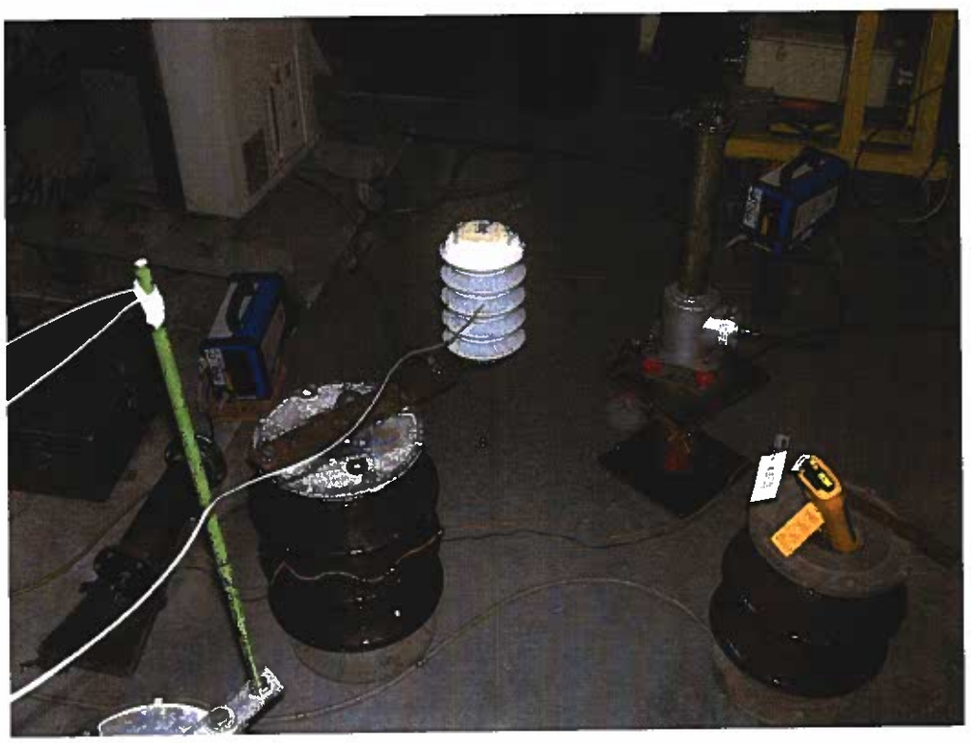

Photo no. 2

Arrester section assembled in thermal model

Lic. Abelardo Brugada
Representante Legal
Piro'y S.A.

ACCREDIA
LAB N° 0030

Test procedure on complete arrester

The complete arrester was placed in the testing laboratory (see photograph no.1 on page 7) at still air ambient temperature of 21,1 °C. The ambient temperature was held at 21,1 °C ±3K during the test .
The complete arrester was supplied by the manufacturer fitted with a optical thermal sensors attached to the MO resistors (see drawing attached on this test report).

The surge arrester was heated to a temperature of approximately 140 °C by the application of a power frequency overvoltage with an amplitude above the reference voltage.
The heating time was 22 min. (the maximum time according to the reference standard is 60 min.).

When the specified temperature of about 140 °C was reached the voltage source was disconnected and the cooling time curve was determined over a period of not less than 2 hours.

Test procedure on arrester section

The arrester section was placed in the testing laboratory (see photograph no.2 on page 8) at still air ambient temperature of 22,2 °C.
The ambient temperature was held at 22,2°C ±3K during the test .
The arrester section was supplied by the manufacturer and one optical thermal sensor has been used (see drawing attached on this test report).

The MO resistor was heated to a temperature of approximately 140 °C by the application of a power frequency overvoltage with an amplitude above the reference voltage.
The heating time has been of 22 min. (the maximum time according to the reference standard is 60 min.).

When the specified temperature of about 140 °C was reached the voltage source was disconnected and the cooling time curve was determined over a period of not less than 2 hours.

Lic. Abelardo Brugada
Representante Legal
Piro'y S.A.

ACCREDIA
LAB N° 0030

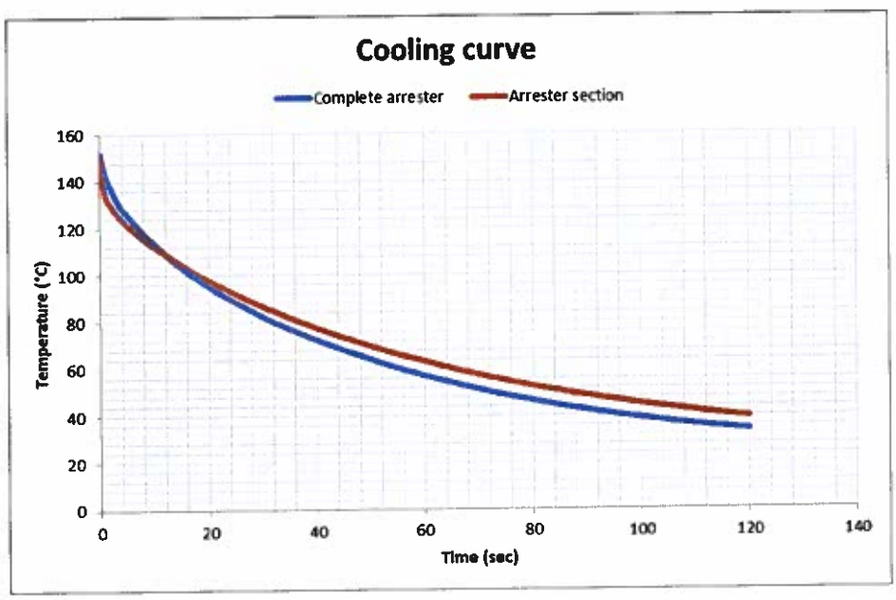

Lic. Abelardo Brugada
Representante Legal
Piro'y S.A.

Test result and the calculation of the temperature compensation

The cooling curve (see pag.10) of the arrester section hasn't been for all instants equal or higher than the cooling curve of the arrester. The compensation may be made adding a **ΔT** to the start temperature ϑ_{start} of the prorated section during the preheating (thermal recovery part) for Operating duty test and Power-frequency voltage versus time test.

Sample	T	T_A	T_0	$T_0 - T_A$	Heating time	Date
Complete arrester	is the measured temperature during cooling every minute	21,1 °C	152,0 °C	130,9 °C	22 min	September 18, 2017
Arrester section	is the measured temperature during cooling every minute	22,2 °C	148,8 °C	125,8 °C	22 min	September 18, 2017

Legend:

T	is the measured temperature instant by instant
T_A	is the average ambient temperature during test
T_0	is the maximum heating temperature
Trel	$(T-T_A) / (T_0-T_A)$
ΔT	temperature compensation

The two relative temperatures T_{rel} arrester and T_{rel} arrester section have been plotted (see page 12) for the cooling time (≥7200s).
During the cooling time the difference T_{rel} arrester - T_{rel} arrester section has been calculated and the max value has to be considered.

K= max (T_{rel} arrester - T_{rel} arrester section)= 0,044329149

$\Delta T = K (T_0 - T_A)_{max} = 0{,}044329149 * 130{,}9 = 5{,}80$ °C

The compensation temperature **ΔT** resulting from the test is 5,80 °C.

ϑ_{start} = 60 °C + 5,80 °C = 65,80°C

Therefore the ϑ_{start} for thermal recovery test in the Operating duty test and Power-frequency voltage versus time test is equal to 65,80 °C.

Lic. Abelardo Brugada
Representante Legal
Piro'y S.A.

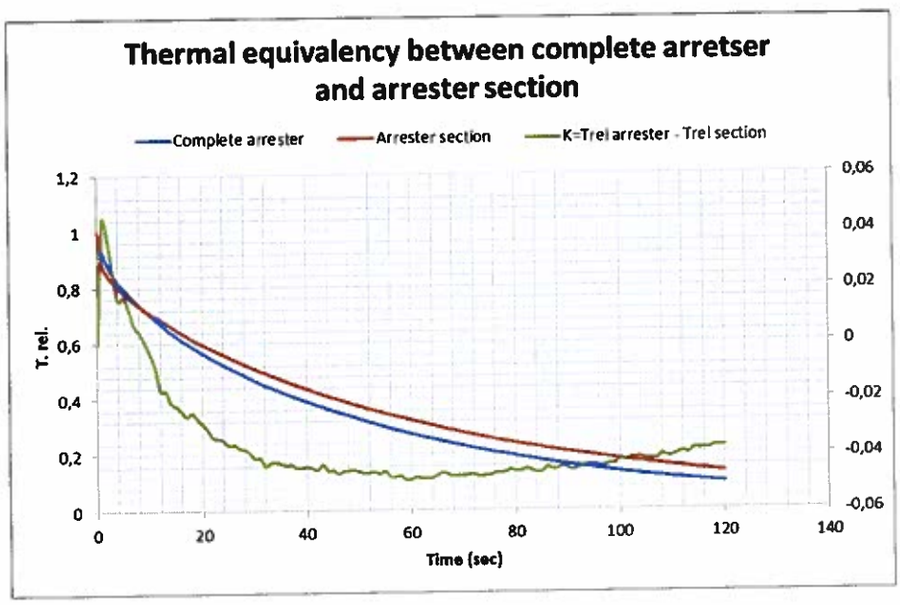

Lic. Abelardo Brugada
Representante Legal
Piroy S.A

Instruments used for temperature measurement

Instrument type	CESI no.	Note:
ASKIVIANA	022469 - Rx 022468 - Tx	used surge arrester unit and surge arrester section temperature
FLUKE thermometer	030889	used for ambient temperature

Eduardo Brugada
Representante Legal
Piro'y S.A.

ACCREDIA
LAB N° 0030

Circuit A0019

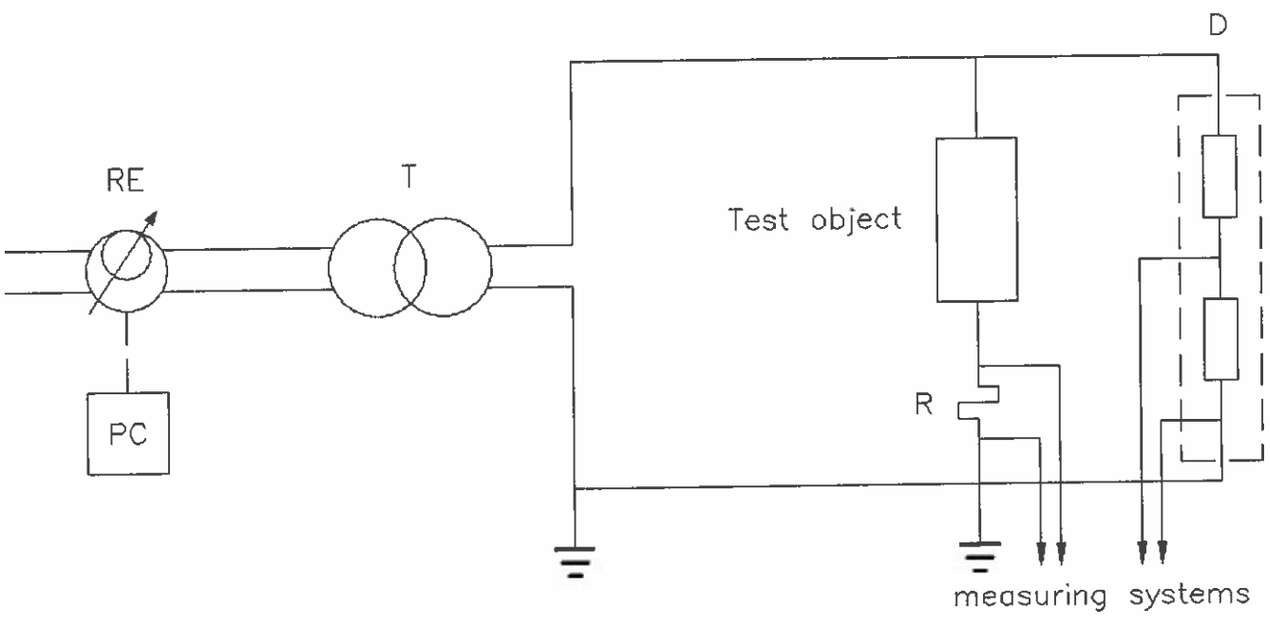

Power frequency supply

RE - programmable supply type PACIFIC A.C. Power Source 140 ASX.; CESI no. 0560408
PC - personal computer
T - voltage transformer type SPECIALTRASFO; power 60 kVA; voltage 220 V/200 kV (used for complete arrester)

Current measuring system

R - Current shunt CESI No.31120; R= 941,4 Ω
- Electro optical system CESI No.55829/55828

OSC - Oscilloscope type NATIONAL INSTRUMENT NI PXI-1031/NI-PXI 8108/NI-PXI 5122;
- CESI No 056227- 0562226 (on channel No.1)

Voltage measuring system

D - Voltage divider SAGI; CESI No.11120 (used for arrester section)
- Voltage divider SAGI; CESI No 13027 (used for complete arrester)
- Electro optical system CESI No.11517/11518

OSC - Oscilloscope type NATIONAL INSTRUMENT NI PXI-1031/NI-PXI 8108/NI-PXI 5122;
- CESI No 056227- 0562226 (on channel No.2)

Software system:

SW - S.A.D. Surge arrester version 2.0

Lic. Abelardo Brugada
Representante Legal
Piro'y S.A.

ACCREDIA
LAB N° 0030

PA-DM.001.ST.01

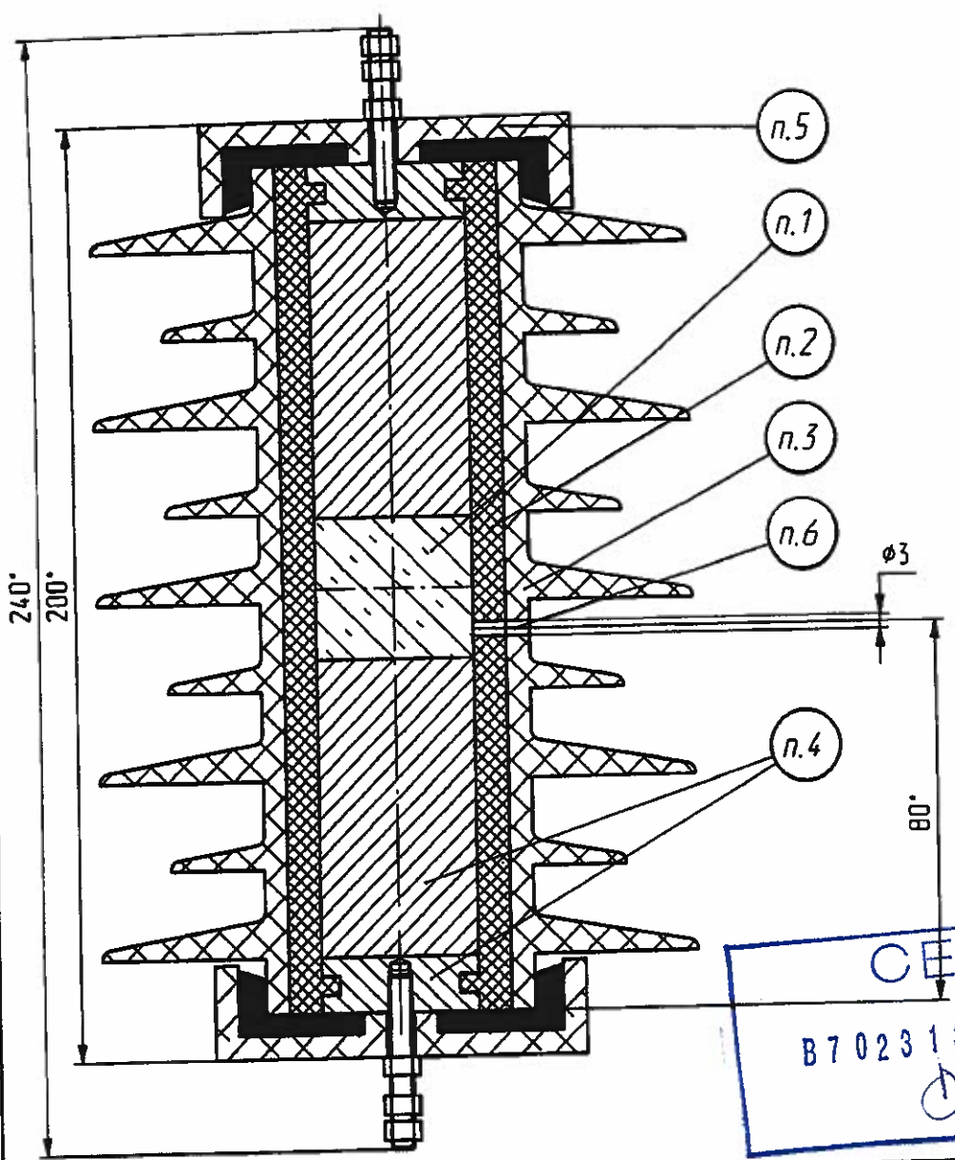

CESI
B7023130001

№ п.п.	name	note
n.1	varistor B34/30	000
n.2	Housing	000
n.3	External insulation	000
n.4	Metal flanges and spacers	000
n.5	Additional thermal insulation	000
n.6	Aperture for a thermocouple	Form and size matching is required

1. * - Dimensions for reference

Lic. Abelardo Brugada
Representante Legal
Piro'y S.A.

Изм.	Лист	№докум.	Подп.	Дата
Разраб.		Потапов В.В.		
Пров.		Потапов А.В.		
Т.контр.				
Н.контр.				
Утв.		Шевцов М.В.		

PA-DM.001.ST.01

section in thermal model.
Surge Arrester PA-DM

Лит.	Масса	Масшт.
		1:1
Лист 1	Листов 1	

ЗАО "Полимер-Аппарат"

Копировал

Формат А3

Перв. применение | Справ. № | Подп. и дата | Инв. № дубл. | Взам. инв. № | Подп. и дата | Инв. № подл.

ГОСТ 2.104-68 Форма 2

ПА.ОПН.035.001.054.01

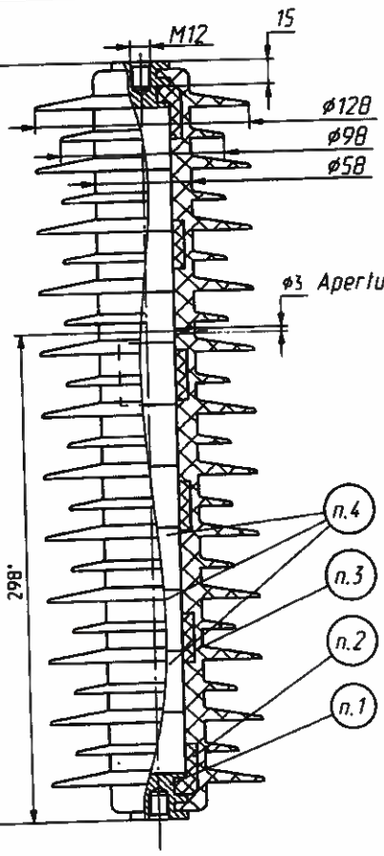

ø3 Aperture for a thermocouple (Form and size matching is required)

CESI
B7024013-001

№ п.	Наименование/name	№ черт./drawing №	Примечание/remark
1	Металлический фланец/Metal flange	ПА.ОПН.035.001.14 А	
2	Изоляционный корпус/Insulations tube	ПА.ОПН.035.010.01 А	
3	Защитная силиконовая оболочка/Silicone rubber	ПА.ОПН.035.010.03 А	
4	Варистор/Metal-oxide varistor	-	

1. Все размеры для справок. All dimensions for reference

Изм.	Лист	№ докум.	Подп.	Дата	ПА.ОПН.035.001.054.01			
Разраб.		Иванов И.			METAL-OXIDE SURGE ARRESTER PA-0H-090-54-20/20 Heat dissipation test	Лит.	Масса	Масшт.
Пров.		Петров А.					5.8	1:2
Т.контр.		Климов А.				Лист 1	Листов 1	
Н.контр.		Данилов С.				ЗАО "Полимер-Аппарат"		
Утв.		Федоров К.						

Копировал Формат А3

Lic. Abelardo Brugada
Representante Legal
Piro'y S.A.

PA.VAR.0400.30

Тип b

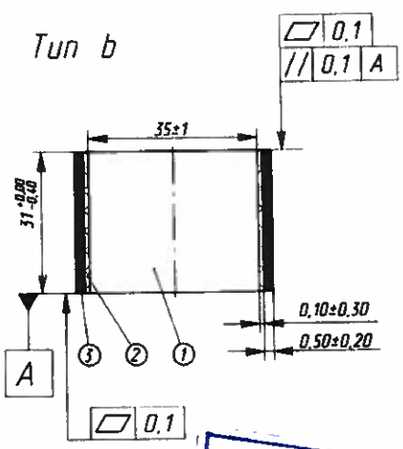

Тип a

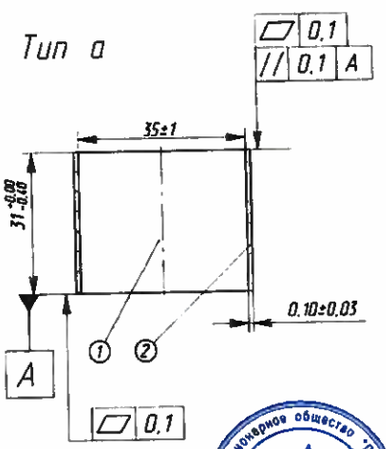

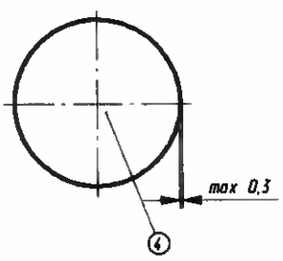

1. Металлоксидный варистор (MOV disk)
2. Изоляционное покрытие стекло (Glass insulating collar)
3. Изоляционное покрытие полиуретан (PU insulating collar)
4. Алюминиевый электрод (Al - electrode)

CESI
B7020307-001

Закрытое акционерное общество "Полимер-Аппарат" • Санкт-Петербург •

Изм.	Лист	N°докум.	Подп.	Дата
Разраб.		Потапов А.В.		05.17
Пров.		Петухов А.П.		05.17
Т.контр.				
Н.контр.				
Утв.		Шевцов И.В.		05.17

PA.VAR.0400.30

Varistor B34/30

Оксид цинка

Лит.	Масса	Масшт.
	0.177	1:1
Лист 1	Листов 1	

ЗАО "Полимер-Аппарат"

Копировал

Формат А4

Взам. инв. N° | Подп. и дата | Инв. N° подл.

Lic. Abelardo Brugada
Representante Legal
Piro'y S.A.

Test Report

Document No.	B7019962	Copy No.	1	Number of pages	65
Apparatus	Polymer-housed surge arrester section type PA-DM section ST with additional thermal insulation				
Designation	---				
Serial Number	---				
Manufacturer	Joint-Stock Company " Polymer-Apparat"				
Client	Joint-Stock Company " Polymer-Apparat" Ak. Kostantinova str.,1 195427 Saint-Petersburg - Russia Federation				
Tested for	---				
Date(s) of tests	October 3 – 4, 2017				
Tested by	CESI S.p.A. Via Rubattino, 54 20134 – Milano - Italy				
Test performed	Operating duty test				

The apparatus, constructed in accordance with the description, drawings and photographs incorporated in this document has been subjected to the series of proving tests in accordance with:

IEC 60099-4 – Edition 3.0 (2014-06)

The results are shown in the record of proving tests and the oscillograms attached hereto. The ratings assigned by the Manufacturer are listed on the ratings page.
The document applies only to the apparatus tested. The responsibility for conformity of any apparatus having the same designations with that tested rests with the Manufacturer.

November 20, 2017

Date

Gregori Marco
Test Engineer in charge

The Manager - Arcidiaco Lorenzo
Approved By Document Digitally Signed

Partial reproduction of this document is permitted only with the written permissions from CESI Group.
The authenticity of this document is guaranteed by the integrity of hologram.

The laboratory meets the requirements of the Standard EN ISO/IEC 17025: 2005 "General Requirements for the Competence of Testing and Calibration Laboratories". The in force status of the accreditation and the list of accredited tests may be checked in the WEB site: www.accredia.it

LAB N° 0030

Lic. Abelardo Brugada
Representante Legal
Piro'v S.A.

Trust the Power of Experience

PAD B7019962 (2441798) - CONFIDENTIAL USE

Notes

STL-Member

CESI Group members are founder members of the SHORT-CIRCUIT TESTING LIAISON (STL) which has been established in 1969. STL is a forum for voluntary international cooperation of testing organizations.

CESI Group Test Documents description

Type Test Certificate of .....

Issued for type tests of high voltage products (> 1 kV_{ac}; > 1,5 kV_{dc}), which have successfully been carried out in full compliance with the relevant specifications or standards and STL Guides valid at the time of the test. The Type Test Certificate consists of documents unequivocally identifying the test object and describes all conditions under which the tests were conducted. It gives evidence of the unobjectionable behavior of the test object during the tests in line with the normative documents applied as well as of the results of successful testing.

Test Certificate of (complete / selected) Type Tests

Issued if type tests of low voltage products (< 1 kV_{ac}; < 1,5 kV_{dc}) requested by the relevant product standard were passed. For these tests the equipment under test must be clearly identified by technical description, drawings, and additional specifications.

Certificate of Design Verification

Issued for passed design verification tests according to IEC 61439. For these tests the equipment under test must be clearly identified by technical description, drawings, and additional specifications.

Type Test Report

Issued for high and low voltage products if parts of selected type tests have been passed; those shall be carried out in full compliance with the relevant standards but (for high voltage products) do not fulfill all STL requirements for issuing a Type Test Certificate. For these tests the equipment under test must be clearly identified by technical description, drawings, and additional specifications.

Test Report

Issued for all other tests on high and low voltage products which have been carried out according to specifications, standards and/or client instructions

On-Site Test Record

Issued as a record of results acquired during the on-site tests / measurements

Test Award

Can be additionally issued for all named types of test documents above if the tests to be referenced were passed

Lic. Abelardo Brugada
Representante Legal
Pirn'y S.A.

Tests witnessed by:

--- ---

Identification of the object: Requested

The Manufacturer guarantees that the tested object is manufactured according to the submitted drawings.
CESI checked that these drawings adequately represent in shape and dimensions the essential details and the parts of the tested object.
These drawing, identified by CESI and numbered B7024364 No. 1 , is annexed to this document.

Test evaluation
With reference to the Standards/Specifications listed in the first page and the characteristics of the tested sample assigned by manufacturer, the carried out tests passed SUCCESSFULLY.

The reported expanded uncertainties are determined in accordance with the Publication JCGM 100"Evaluation of measurement data - Guide to the expression of uncertainty in measurement" and are based on a standard uncertainty multiplied by a coverage factor k = 2, which for a normal distribution provides a level of confidence of approximately 95 %.

- Voltage a.c.	**: ± 3,0%**
- Residual peak voltage (impulse tests)	**: ± 3,0%**
- Current a.c.	**: ± 3,0%**
- Peak current (impulse tests)	**: ± 3,0%**
- Time (impulse tests)	**: ± 10,0%**
- Time (a.c. tests)	**: ± 1,5%**

Laboratory information

Receipt date of the sample	September 2017
Test location	CESI – Via Rubattino 54 – Milan
CESI testing team	Mr L. Podavitte – Mr I. Guacci
Test laboratory	P177
ODV SAP	70006781

Lic. Abelardo Brugada
Representante Legal
Pirelli S.A.

content	page	test date
Test object characteristics	5	
Photographs of the test object	6	
Reference standard	7	
Test carried out	7	
Test object identification	7	
Test procedure	8	
Summary of test result	9	
Operating duty test	from page 10 to 18	from October 3 to October 4, 2017
Technical data	from page 19 to 24	
Pages annexed:		
Oscillograms n. 39 pages		
Client's drawing (Polymer-housed surge arrester section) - CESI no. B7024364 – n.1 page		
Client's drawing (MO resistor) – CESI no. B7020387 – n.1 page		

Lic. Abelardo Brugada
Representante Legal
Pirelli S.A.

Test object characteristics (assigned by the client)

Manufacturer's name	Joint-Stock Company " Polymer-Apparat"
Polymer-housed surge arrester section type	PA-DM section ST
Drawing code	PA-DM.001.ST.02
MO-resistor supplier's	Joint-Stock Company " Polymer-Apparat"
Metal-oxide resistor type	B34/30
Arrester class	Distribution
Designation	DH
Number of MO resistor fitted	1
Nominal discharge current - [kA]	10
Rated voltage - U_r [kV]	1,077 x $U_{ref.}$
Continuous operating voltage - U_c [kV]	0,861 x $U_{ref.}$
Repetitive charge transfer rating – Q_{rs} [C]	0,4
Rated thermal charge transfer rating - Q_{th} [C]	1,1
Reference current - $I_{ref.}$ [mA]	1,0
Rated frequency - [Hz]	48÷62
Year of manufacture	08/2017

geometrical characteristics measured on the MO resistor

Total height [mm]	31,1 mm
Diameter [mm]	36,6 mm

Lic. Abelardo Brugada
Representante Legal
Piro'y S.A.

ilac-MRA ACCREDIA LAB N° 0030

Photographs of the test object

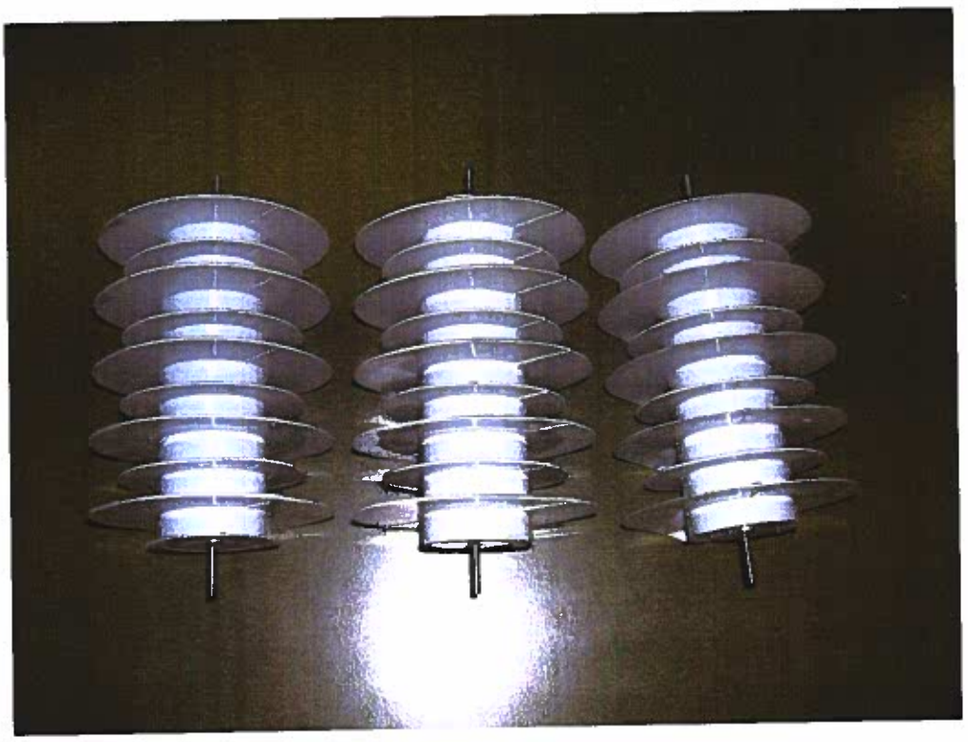

Photo no. 1

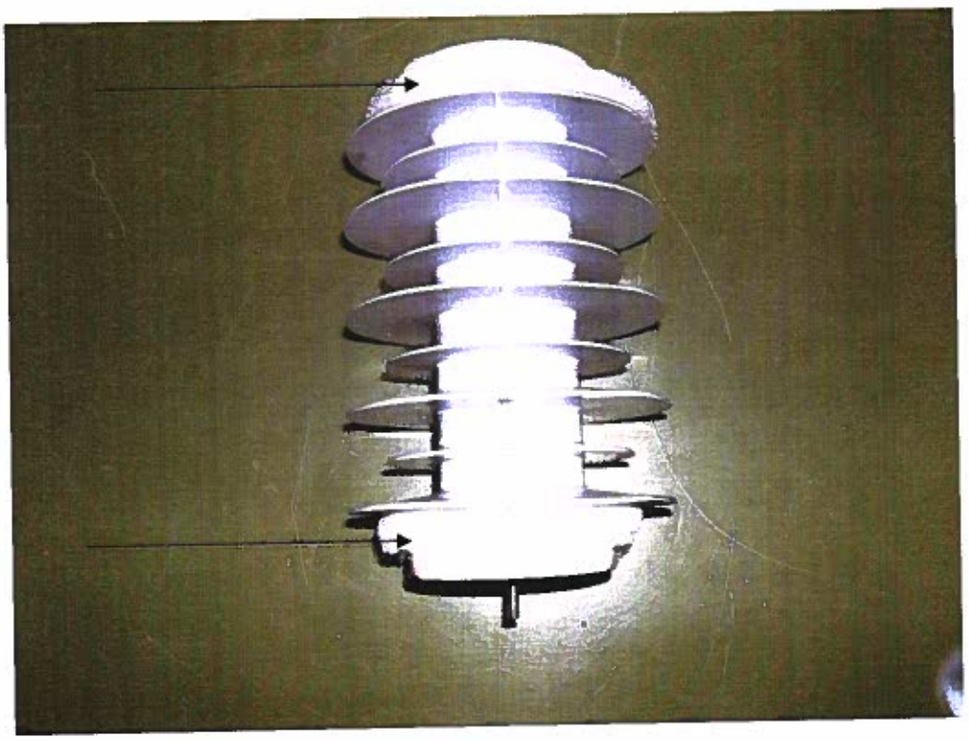

Photo no. 2

Polymer-housed surge arrester section type PA-DM section ST with additional thermal insulation

Lic. Abelardo Brugada
Representante Legal
Piro'y S.A.

ilac-MRA ACCREDIA LAB N° 0030

Reference Standard

IEC 60099-4 (20014/06) -- Edition 3.0 - Clause 10.8.7
"Metal-oxide surge arresters without gaps for a.c. system"

Test carried out	Number of sample tested
Operating duty test	3

Test object identification

Test object name	Identification of test sample (given by CESI)	Identification of test sample (given by JSC "Polymer Apparat)
Polymer-housed surge arrester section type PA-DM section ST with additional thermal insulation	OD1	00006
	OD2	00007
	OD3	00008

Lic. Abelardo Brugada
Representante Legal
Piro'y S.A.

ACCREDIA
LAB N° 0030

Test procedure

1. Test performed on Polymer-housed metal-oxide surge arrester section in open air

The test procedure consisted of the following sequence:

Initial test

a) Measurement of the lightning impulse residual voltage at the nominal discharge current
b) Measurement of the power frequency reference voltage at the reference current

Conditioning

c) Application of a high current impulse 4/10 µs at 100 kA

2. Test performed on Polymer-housed metal-oxide surge arrester section assembled in thermal model

Thermal recovery test

d) Calculation of the voltage correction factors
e) The surge arrester sections were kept in an oven at the temperature of 66 °C till thermal equilibrium (not more than twenty hours)
f) Injection of two lightning current impulses 8/20 µs at the rated thermal charge transfer Q_{th}. A time shorter than 100 ms after the application of the second lightning current impulse energization at U_r' for 10 sec. and then at U_c' for 30 min. to verify the thermal stability.
   Note:
   - intervals between lightning duration current impulses: 60 seconds
   - nominal test frequency : 50 Hz

3. Test performed on Polymer-housed metal-oxide surge arrester section in open air

g) Measurement of the lightning impulse residual voltage at nominal discharge current for comparison with initial value
h) After that the sample has cooled to ambient temperature, two current impulses 8/20 at In have been applied for to check the integrity of the internal parts. The interval between impulses was 50-60 seconds.

Test result

The visual inspection of the sample after the test has revealed no sign of physical damage.
The variation of lightning impulse residual voltage before and after the test was less than 5% (maximum allowed variation according to reference standard is 5%). During the two last impulses the oscillograms not reveal any breakdown and the variation of lightning impulse residual voltage between the initial measurement and the last impulse was less than 5% (maximum allowed variation according to reference standard is 5%)
The thermal recovery was achieved.

The acceptance criteria are fulfilled and therefore the test result is positive.

Lic. Abelardo Brugada
Representante Legal
Piro'y S.A.

ilac-MRA ACCREDIA LAB N° 0030

Summary of test results

Variation of lightning impulse residual voltage at I_n

sample	before test		after test		Variation
	discharge current	residual voltage	discharge current	residual voltage	
	kA	kV	kA	kV	%
OD1	10,12	14,24	10,12	14,50	+1,83
OD2	10,12	14,12	10,17	14,34	+1,56
OD3	10,13	14,13	10,18	14,25	+0,85

Variation of lightning impulse residual voltage between residual voltage measurement at In during initial test and residual voltage measurement at In during last impulse

sample	before test		after test (last impulse)		Variation
	discharge current	residual voltage	discharge current	residual voltage	
	kA	kV	kA	kV	%
OD1	10,12	14,24	9,95	14,47	+1,60
OD2	10,12	14,12	10,05	14,36	+1,70
OD3	10,13	14,13	10,13	14,27	+0,99

Visual inspection after the test

The visual external inspection of polymer-housed metal-oxide surge arrester section after the test has revealed no sign of physical damage

Lic. Abelardo Brugada
Representante Legal
Piro y S.A.

ACCREDIA
LAB N° 0030

Operating duty test.

Lightning impulse residual voltage measurement before the test

Test circuit: A0120

Date: October 3, 2017

Sample	Requested current	Charging voltage	Oscillogram	Current waveshape	Discharge current	Residual Voltage
No.		kV	No.	µs	kA	kV
OD1	I_n	24,6	1	8,5/18,2	10,12	14,24
OD2		24,5	2		10,12	14,12
OD3		24,5	3		10,13	14,13

Notes:

Lic. Abelardo Brugada
Representante Legal
Piro'y S.A.

ilac-MRA ACCREDIA LAB N° 0030

Operating duty test.

Reference voltage test

Test circuit: A0019

Date: October 3, 2017

Sample No. OD1						
oscillogram	voltage	current	current	current	power	3rd harmonic amplitude
No.	kV	+ mA_{cr}	- mA_{cr}	mA_{rms}	W	µA
4	5,48	0,862	1,000	0,561	1,43	--

Sample No. OD2						
oscillogram	voltage	current	current	current	power	3rd harmonic amplitude
No.	kV	+ mA_{cr}	- mA_{cr}	mA_{rms}	W	µA
5	5,42	0,850	1,00	0,556	1,38	--

Sample No. OD3						
oscillogram	voltage	current	current	current	power	3rd harmonic amplitude
No.	kV	+ mA_{cr}	- mA_{cr}	mA_{rms}	W	µA
6	5,40	0,887	1,00	0,561	1,41	--

Lic. Abelardo Brugada
Representante Legal
Piro'y S.A.

ACCREDIA
LAB N° 0030

Operating duty test.

Conditioning: Application of one 100 kA 4/10 µs high current impulses

Test circuit: A0121

Date: October 3, 2017

Sample	Impulse	Charging voltage	Oscillogram	Discharge current	Current waveshape	Opposite polarity
No.	No.	kV	No.	kA	µs	%
OD1	1	85,0 x 2	7	101,3	4,5/9,2	9,0
OD2	1	85,0 x 2	8	101,4		
OD3	1	85,0 x 2	9	101,3		

Notes:

Lic. Abelardo Brugada
Representante Legal
Piro'y S.A.

ACCREDIA
LAB N° 0030

Operating duty test.

Voltage correction factor and thermal energy calculations

Date: October 4, 2017

Sample	U_{ref} [1]	KU_r [2]	KU_C [3]	U_r' [4]	U_c' [5]
No.	kV			kV	kV
OD1	5,48	1,077	0,861	5,902	4,718
OD2	5,42			5,837	4,667
OD3	5,40			5,816	4,649

[1] U_{ref} : measured reference voltage
[2] KU_r : maximum guaranteed factor for calculation of Ur' – $U_r/U_{ref.min.}$ (declared by the Manufacturer)
[3] KU_C : maximum guaranteed factor for calculation of Uc' – $U_c/U_{ref.min.}$ (declared by the Manufacturer)
[4] U_r' : corrected rated voltage [4] = [1] × [2]
[5] U_c' : corrected continuous operating voltage [5] = [1] × [3]

Sample	U_r'	Requested thermal charge transfer, Q_{th}	Requested Q_{th} per impulse
No.	kV	C	C
OD1	5,902	1,1	0,55 (±10%)
OD2	5,837		0,55 (±10%)
OD3	5,816		0,55 (±10%)

Lic. Abelardo Brugada
Representante Legal
Piro'y S A

ACCREDIA
LAB N° 0030

Operating duty test.

Application of the lightning current impulses 8/20 µs, corrected rated voltage U_r' and corrected continuous operating U_c' for evaluation of the thermal stability.

Test circuit: A0123-A0020-A0131

Sample No.: OD1

Ambient temperature: 23 °C
Preheating temperature: 66 °C

Date: October 4, 2017

Lightning current impulses 8/20 µs application

Oscillogram	Impulse	Charging voltage	Residual voltage	Discharge current	Q_{th}	Applicable range for Q_{th}
No.	No.	kV	kV	kA	C	C
10	1	61,0 x 2	---	38,70	0,55	0,495÷0,605
11	2	61,0 x 2	---	38,60	0,55	0,495÷0,605

Current impulse waveshape
(µs)
8,7 /18,2

Corrected rated voltage U_r' application

Oscillogram	Time	U_r'	Current	Current
No.	s	kV	+ mA_{cr}	- mA_{cr}
12	0	5,902	66,0	110,0
13	10		26,0	52,0

Corrected continuous operating voltage U_c' application to evaluate the thermal stability

Oscillogram	Time	U_c'	Current	Current	Power	Temperature
No.	min	kV	+ mA_{cr}	- mA_{cr}	W	°C
14	0	4,718	1,08	1,60	2,10	---
	5		0,97	0,97	1,00	---
	10		0,95	0,95	0,88	---
15	15		0,94	0,94	0,82	---
	20		0,94	0,93	0,74	---
	25		0,93	0,92	0,69	---
16	30		0,91	0,91	0,65	---

continued

Note :

Lic. Abelardo Brugada
Representante Legal
Piroy S.A.

ACCREDIA
LAB N° 0030

Continued

Sample No.: OD2

Ambient temperature: 23 °C
Preheating temperature: 66 °C

Date: October 4, 2017

Lightning current impulses 8/20 µs application

Oscillogram	Impulse	Charging voltage	Residual voltage	Discharge current	Q_{th}	Applicable range for Q_{th}
No.	No.	kV	kV	kA	C	C
17	1	61,0 x 2	---	38,55	0,55	0,495÷0,605
18	2	61,0 x 2	---	38,50	0,55	0,495÷0,605

Current impulse waveshape
µs
8,7/18,2

Corrected rated voltage U_r' application

Oscillogram	Time	U_r'	Current	Current
No.	s	kV	+ mA_{cr}	- mA_{cr}
19	0	5,837	66,0	109,0
20	10		25,0	49,0

Corrected continuous operating voltage U_c' application to evaluate the thermal stability

Oscillogram	Time	U_c'	Current	Current	Power	Temperature
No.	min	kV	+ mA_{cr}	- mA_{cr}	W	°C
21	0	4,667	1,08	1,52	2,02	---
	5		1,07	1,04	1,10	---
	10		0,89	0,98	0,99	---
22	15		0,96	0,96	0,88	---
	20		0,94	0,94	0,77	---
	25		0,93	0,93	0,73	---
23	30		0,92	0,92	0,67	---

Note :

Lic. Abelardo Brugada
Representante Legal
Piro'y S.A.

continued

ilac-MRA ACCREDIA LAB N° 0030

Continued

Sample No.: OD3

Ambient temperature: 23 °C
Preheating temperature: 66 °C

Date: October 4, 2017

Lightning current impulses 8/20 µs application

Oscillogram	Impulse	Charging voltage	Residual voltage	Discharge current	Q_{th}	Applicable range for Q_{th}
No.	No.	kV	kV	kA	C	C
24	1	61,0 x 2	---	38,25	0,55	0,495÷0,605
25	2	61,5 x 2	---	38,50	0,55	0,495÷0,605

Current impulse waveshape
µs
8,7 /18,2

Corrected rated voltage U_r' application

Oscillogram	Time	U_r'	Current	Current
No.	s	kV	+ mA_{cr}	- mA_{cr}
26	0	5,816	67,0	11,0
27	10		30,0	60,0

Corrected continuous operating voltage U_c' application to evaluate the thermal stability

Oscillogram	Time	U_c'	Current	Current	Power	Temperature
No.	min	kV	+ mA_{cr}	- mA_{cr}	W	°C
28	0	4,649	1,08	1,65	2,05	---
	5		0,98	1,00	0,97	---
	10		0,96	0,97	0,86	---
29	15		0,95	0,96	0,80	---
	20		0,94	0,95	0,73	---
	25		0,93	0,94	0,68	---
30	30		0,92	0,91	0,60	---

Note :

Lic. Abelardo Brugada
Representante Legal
Piro'y S.A.

ACCREDIA
LAB N° 0030

Operating duty test.

Lightning impulse residual voltage measurement after the test

Test circuit: A0120

Date: October 4, 2017

Sample	Requested current	Charging voltage	Oscillogram	Current waveshape	Discharge current	Residual Voltage
No.	kA	kV	No.	µs	kA	kV
OD1	10	24,6	31	8,6/18,3	10,12	14,50
OD2	10	24,6	32		10,17	14,34
OD3	10	24,6	33		10,18	14,25

Notes:

Lic. Abelardo Brugada
Representante Legal
Pirelli S.A.

ACCREDIA
LAB N° 0030

Operating duty test.

Additional two lightning impulses residual voltage measurement for check no damage occurred during the test

Test circuit: A0120

Date: October 4, 2017

Sample	Requested current	Charging voltage	Oscillogram	Current waveshape	Discharge current	Residual voltage
No.		kV	No.	µs	kA	kV
OD1	I_n	24,5	34	8,6/18,3	9,96	14,46
		24,5	35		9,95	14,47
OD2		24,5	36		10,10	14,31
		24,5	37		10,05	14,36
OD3		24,5	38		10,18	14,25
		24,5	39		10,13	14,27

Notes:

Lic. Abelardo Brugada
Representante Legal
Piro'y S.A

ACCREDIA
LAB N° 0030

Circuit A0019

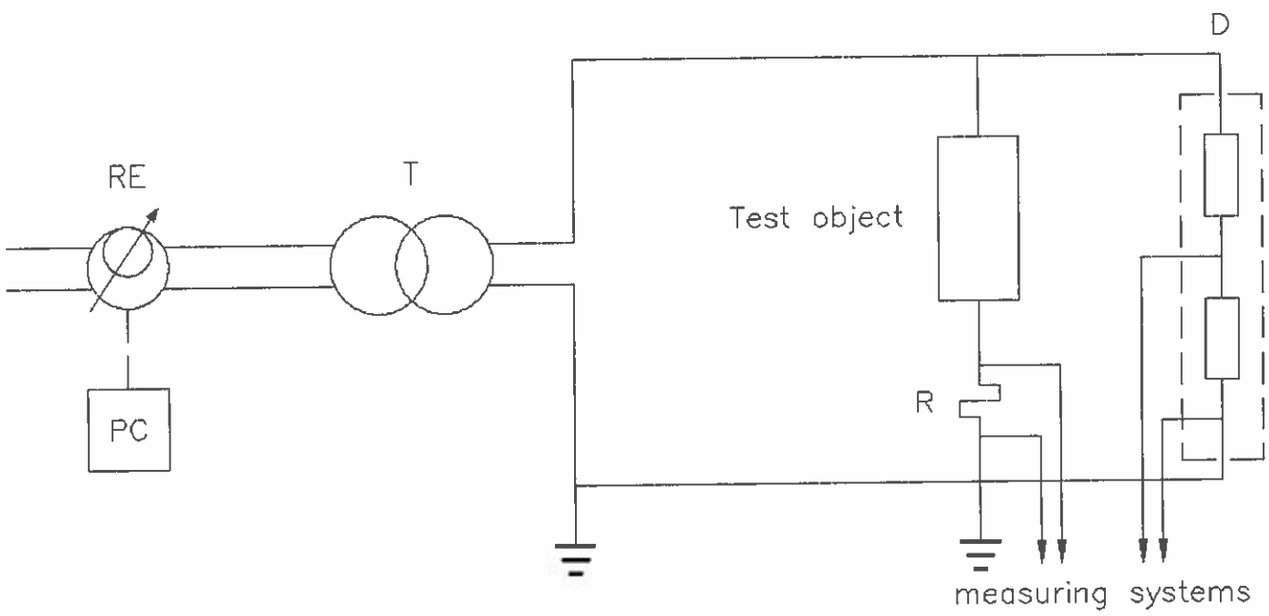

Power frequency supply

RE - programmable supply type PACIFIC A.C. Power Source 140 ASX.; CESI no. 0560408
PC - personal computer
T - voltage transformer type SPECIALTRASFO; power 30 kVA; voltage 200 V/15-30 kV

Current measuring system

R - Current shunt CESI No.31120; R= 940,5 Ω
- Electro optical system HBM CESI No. 57986(Rx) – 57987 (Tx)

OSC - Oscilloscope type NATIONAL INSTRUMENT NI PXI-1031/NI-PXI 8108/NI-PXI 5122;
- CESI No 056227- 0562226 (on channel No.1)

Voltage measuring system

D - Voltage divider SAGI; CESI No.11120
- Electro optical system type HBM CESI No. 57986(Rx) – 57991 (Tx)

OSC - Oscilloscope type NATIONAL INSTRUMENT NI PXI-1031/NI-PXI 8108/NI-PXI 5122;
- CESI No 056227- 0562226 (on channel No.2)

SOFTWARE SYSTEM:

SW - S.A.D. Surge arrester version 2.0

Lic. Abelardo Brugada
Representante Legal
Piro'y S.A.

ACCREDIA
LAB N° 0030

Circuit A0120

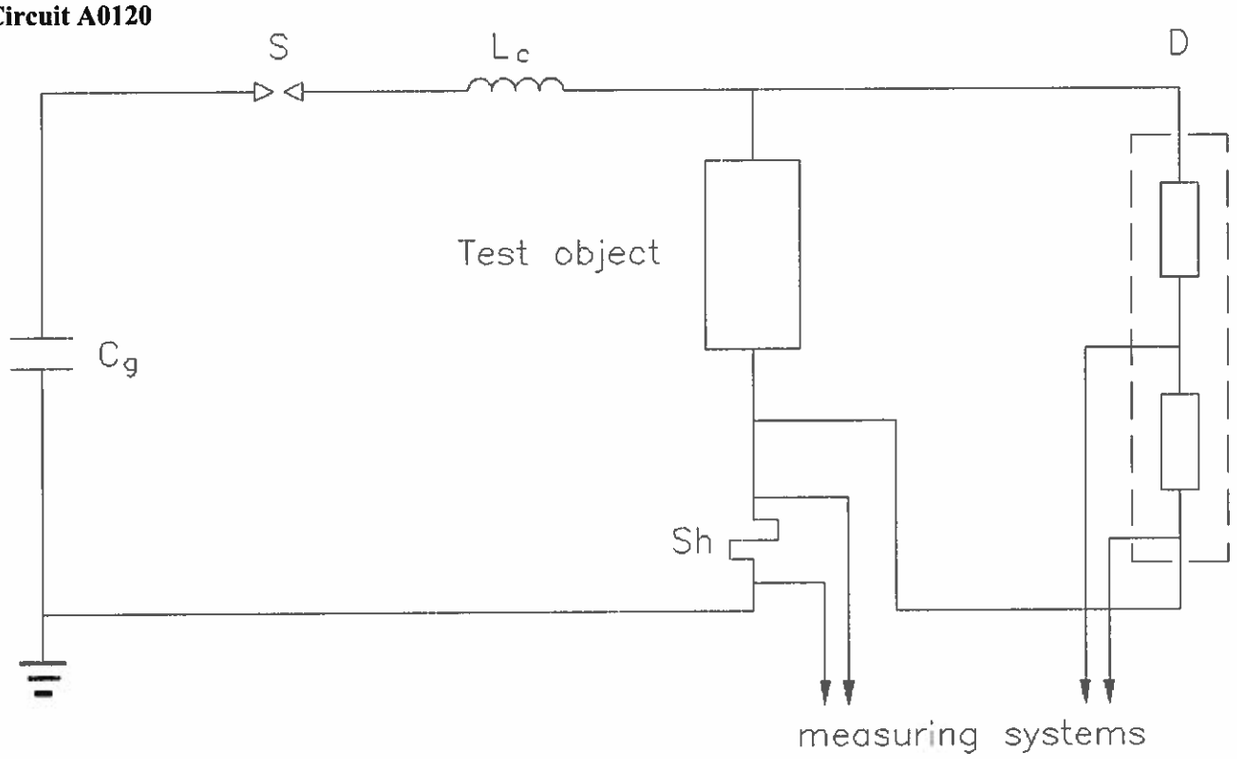

Impulse generator

No. of stages	1
Cg	6,64 µF
Lc	6 µH
S	- Spark-gap

Voltage measuring system.

D	- Voltage divider SAGI; CESI No.11120
	- Electro optical system type HBM CESI No. 57986(Rx) – 57991 (Tx)
OSC	- Oscilloscope type NATIONAL INSTRUMENT NI PXI-1031/NI-PXI 8108/NI-PXI 5122 - CESI No 056227- 0562226 (on channel No.2)

Current measuring system

Sh	- Current shunt CESI No.6042; R= 2 mΩ; peak current= 250 kA
	- Electro optical system HBM CESI No. 57986(Rx) – 57987 (Tx)
OSC	- Oscilloscope type NATIONAL INSTRUMENT NI PXI-1031/NI-PXI 8108/NI-PXI 5152; - CESI No 056227- 0562226 (on channel No.1)

SOFTWARE SYSTEM:

SW - S.A.D. Surge arrester version 2.0

Lic. Abelardo Brugada
Representante Legal
Piro'y S.A.

ACCREDIA
LAB N° 0030

Circuit A0121

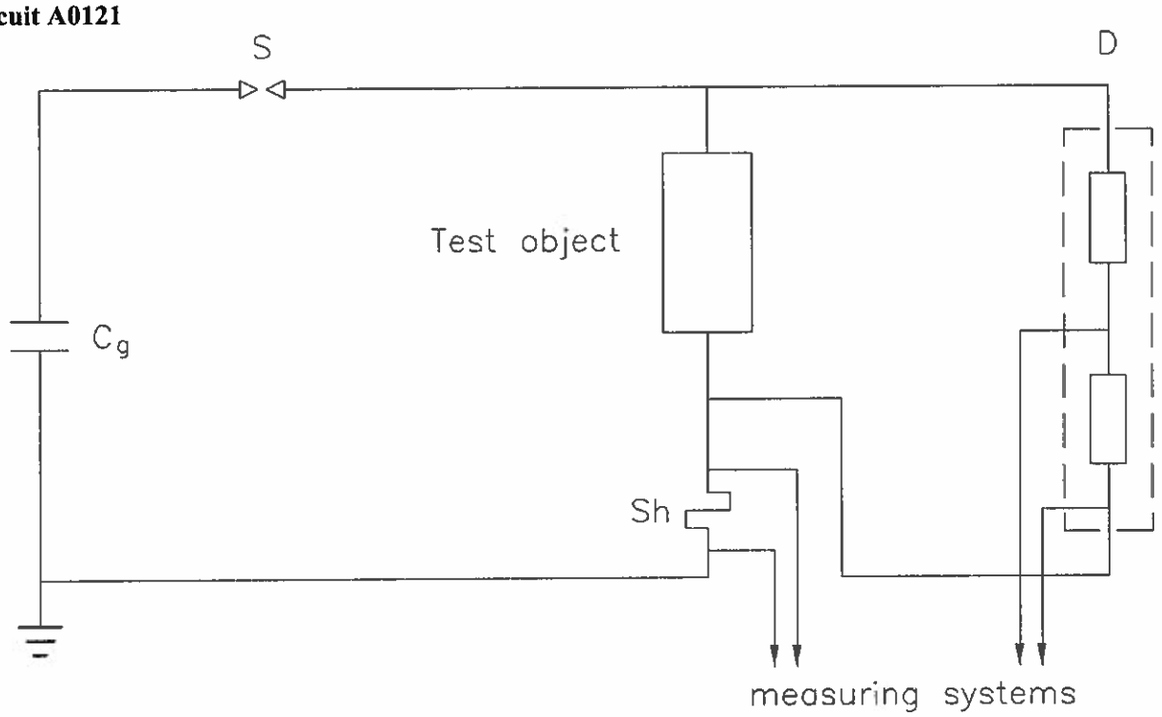

Impulse generator

No. of stages 2
Cg 2,91 µF

S - Spark-gap

Two blocks in series have been added

Voltage measuring system.(not used)

D - Voltage divider SAGI; CESI No.11120
- Electro optical system HBM CESI No. 57986(Rx) – 57991 (Tx)

OSC
- Oscilloscope type NATIONAL INSTRUMENT NI PXI-1031/NI-PXI 8108/NI-PXI 5122;
- CESI No 056227- 0562226 (on channel No.2)

Current measuring system

Sh - Current shunt CESI No.6042; R= 2 mΩ; peak current= 250 kA
- Electro optical system HBM CESI No. 57986(Rx) – 57987 (Tx)

OSC
- Oscilloscope type NATIONAL INSTRUMENT NI PXI-1031/NI-PXI 8108/NI-PXI 5122;
- CESI No 056227- 0562226 (on channel No.1)

SOFTWARE SYSTEM:

SW - S.A.D. Surge arrester version 2.0

Lic. Abelardo Brugada
Representante Legal
Piro'y S.A.

ACCREDIA
LAB N° 0030

Circuit A0123

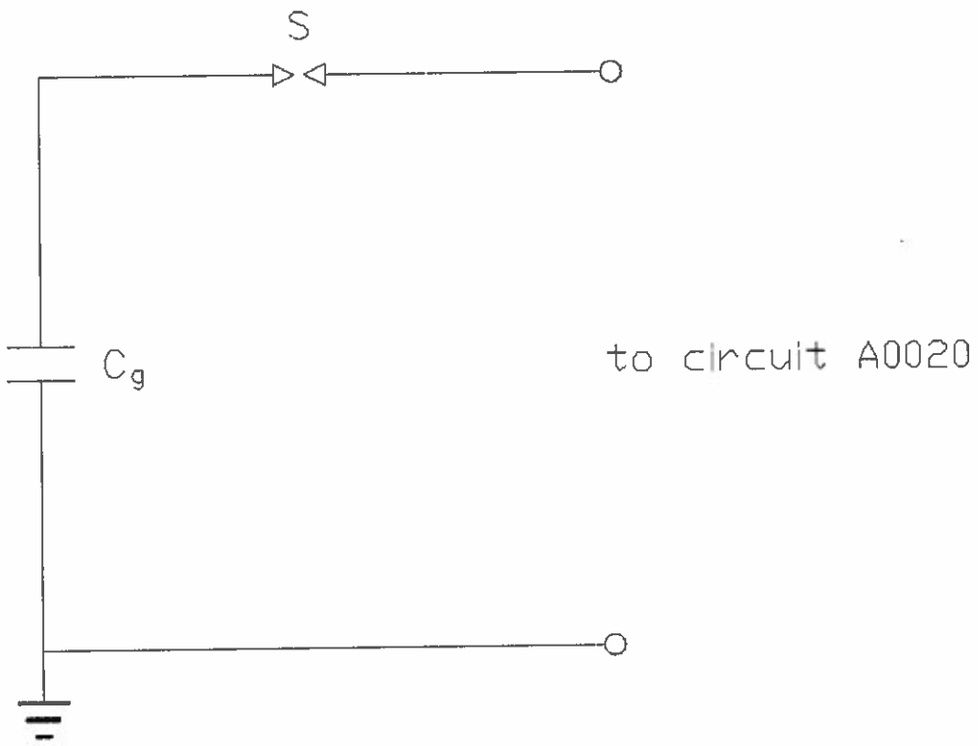

Impulse generator circuit for injection of Q_{th}

No. of stages 2
Cg 2,91 µF
Lc 12 µH

S - spark-gap

Lic. Abelardo Brugada
Representante Legal
Pirelly S.A.

ilac-MRA ACCREDIA LAB N° 0030

Circuit A0020

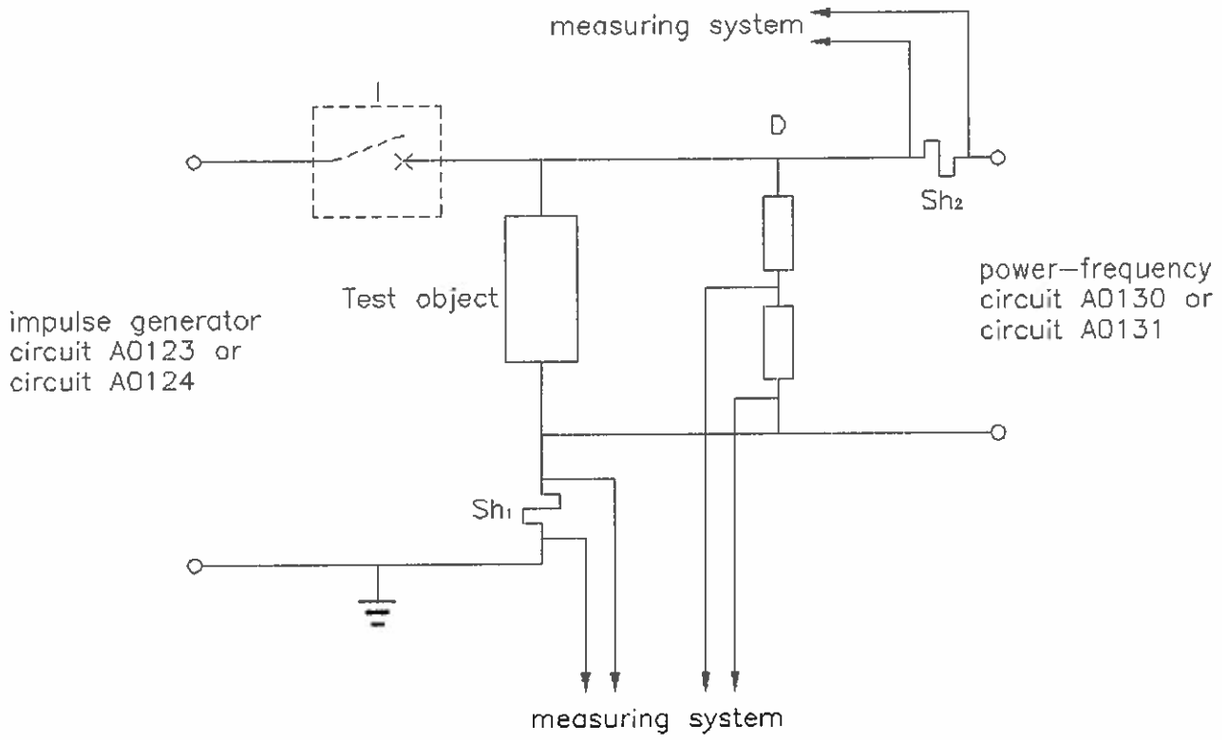

Impulse generator circuit A0123

Impulsive current measuring system

Sh_1	- Current shunt CESI No.6042; R= 2 m Ω
	- Electro optical system HBM CESI No. 57986(Rx) – 57987 (Tx)
$OSC_{2,3}$	- Oscilloscope type NATIONAL INSTRUMENT NI PXI-1031/NI-PXI 8108/NI-PXI 5122 - CESI No 056227- 0562226 (on channel No.2)
I	- Circuit-breaker

Power frequency circuit A0131

Voltage measuring system.

D	- Voltage divider SAGI; CESI No.11120
	- Electro optical system HBM CESI No. 57986(Rx) – 57991 (Tx)
$OSC_{2,3}$	- Oscilloscope type NATIONAL INSTRUMENT NI PXI-1031/NI-PXI 8108/NI-PXI 5122 - CESI No 056227- 0562226 (on channel No.2)

Current measuring system

Sh_2 (TOV - MCOV)	- Current shunt type CESI n. 058315 R= 500 Ω - Electro optical system CESI No. 57986(Rx) – 58294 (Tx)
$OSC_{2,3}$	- Oscilloscope type NATIONAL INSTRUMENT NI PXI-1031/NI-PXI 8108/NI-PXI 5122; - CESI No 056227- 0562226 (on channel No.1)

SOFTWARE SYSTEM:

SW - S.A.D. Surge arrester version 2.0

Lic. Abelardo Brugada
Representante Legal
Prolyn S.A

ACCREDIA
LAB N° 0030

Circuit A0131

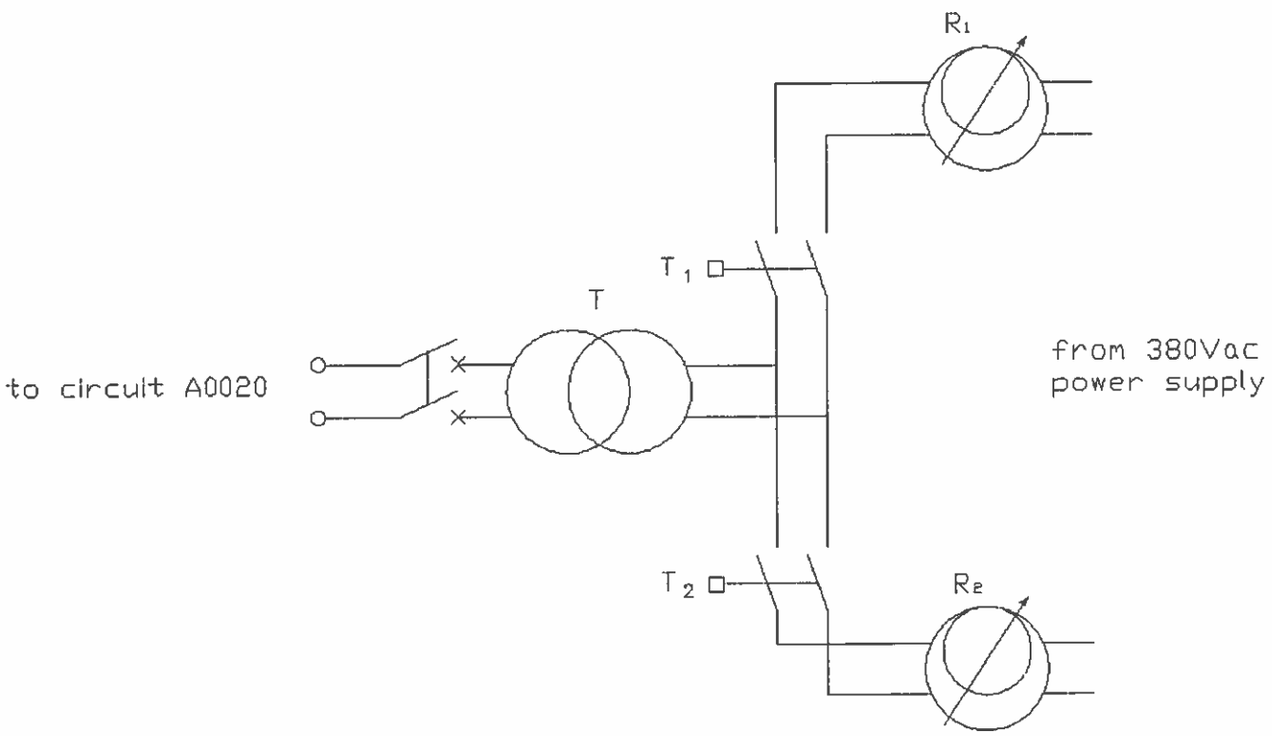

Power-frequancy circuit

from 380Vac power supply

R_1 single-phase voltage regulator CORMES; power 20 kVA; voltage 380/04220 Vac

R_2 single-phase voltage regulator CORMES; power 10 kVA; voltage 380/04220 Vac

T_1 voltage transformer type SPECIALTRASFO; power 30 kVA; voltage 200-400 V/15-30 kV

Lic. Abelardo Brugada
Representante Legal
Prue y S.A.

ACCREDIA
LAB N° 0030