Sieyuan 思源电气股份有限公司
SIEYUAN ELECTRIC CO., LTD.
中国上海市闵行区华宁路 3399 号
No.3399, Hua'ning Rd, Minhang Dist., Shanghai, 201108 P.R.C
TEL: 86-21-61610909
FAX: 86-21-61610900
Web:www.syec.com.cn

Letter of Proof

Jiangsu Rugao High Voltage Electric Apparatus Co., Ltd. is the company dedicates to a long-term engagement in the development and manufacture of high-voltage Circuit Breakers and Disconnectors.

This is to certify that Jiangsu Rugao High Voltage Electric Apparatus Co., Ltd. is the wholly owned subsidiary of Sieyuan Electric Co., Ltd. which is fully in charge of bidding, contracting and execution of its oversea projects.

Sieyuan Electric Co., Ltd

Legal Representative:

Jiangsu Rugao High Voltage Electric Apparatus Co., Ltd.

Legal Representative:

Kawara Trade S.A.

NO.	Client Name	Client Name	Project Name	Project Name	Product	Model	Qty	Voltage Level	Signing Date	Delivery Date	Country	Country	区域	Region	合同编号
55	TRANSELEC S.A	TRANSELEC S.A	Chile Transelec SE 66-220kV AIS Tank Circuit Breaker Project	智利Transelec SE 66-220kV AIS 罐式断路器项目	DS	GW4C-252	103	252kV	28/12/2018		Chile	智利	南美	South America	H2018-00072368
83	ELECNOR CHILE S.A	ELECNOR CHILE S.A	Chile ELECNOR Decreto418 G station package 1 package 3 66kV / 220kV AIS project package 1	智利ELECNOR Decreto418 G站包1包3 66kV/220kV AIS项目 包1	DS	GW4C-252	64	252kV	2019-06-28	2020-05-31	Chile	智利	南美	South America	H2019-00080639
85	ELECNOR CHILE S.A	ELECNOR CHILE S.A	Chile ELECNOR Decreto418 G station package 1 package 3 66kV / 220kV AIS project package 3	智利ELECNOR Decreto418 G站包1包3 66kV/220kV AIS项目 包3	DS	GW4C-252	105	252kV	2019-06-28	2020-05-31	Chile	智利	南美	South America	H2019-00080639

Kawara Trade S.A.

FORMULARIO Nº 13

Formulario de Experiencia y Capacidad en Suministros

Fecha: 25 de Agosto de 2022

[El siguiente formulario deberá ser completado por cada material o equipo indicado del apartado 8 de SUMINISTROS – Requisitos de Participación y Criterios de Calificación.]

Equipo/suministro: SECCIONADOR 220 KV TIPO GW4C-252

Nombre del fabricante y país de procedencia: Sieyuan Electric Co. Ltd., China

N°	Requisito	**Documento de acreditación** *[especificar tipo de documento y fecha de emisión]*	**Emisor** *[especificar empresa o institución]*	**Folio de su oferta** *[indicar ubicación del documento en su oferta]*
1	Acreditar como mínimo *diez (10)* años la experiencia en la fabricación de bienes similares a los ofertados	CONTRATO COMERCIAL 2010-07-08	Nantong Power Transmission and Transformation Engineering Co.	RESPALDO DE ANTECEDENTES DE 10 AÑOS\220 KV\SECCIONADOR TIPO GW4C-252
			.	
			.	

N°	Requisito	**Documento de acreditación** *[especificar tipo de documento y fecha de emisión]*	**Emisor** *[especificar empresa o institución]*	**Cantidad certificada**	**Plazo y fecha de entrega**	**Folio de su oferta** *[indicar ubicación del documento en su oferta]*
2		CONTRATO COMERCIAL 2018-12-28	TRANSELEC S.A	103	2019-10-20	OFERTA TECNICA\INTERRUPTOR\3. ANTECEDENTES\CONTRATOS CORRESPONDIENTES\H2016-00030303

Kawara Trade S.A.

	Acreditar haber fabricado bienes de similares características a los requeridos en el llamado, según descripción y las cantidades mínimas totales indicados en las columnas (b) y (c) de los cuadros indicados en el numeral 8. (para cada uno de los lotes 1, 2 y 3)	CONTRATO COMERCIAL 2019-06-28	ELECNOR CHILE S.A	387	2020-05-31	OFERTA TECNICA\INTERRUPTOR\3. ANTECEDENTES\CONTRATOS CORRESPONDIENTES\ H2016-00030562

N°	Requisito	**Documento de acreditación** *[especificar tipo de documento y fecha de emisión]*	**Emisor** *[especificar empresa o institución]*	**Cantidad certificada**	**Plazo y fecha de entrega**	**Folio de su oferta** *[indicar ubicación del documento en su oferta]*
3	De las cantidades totales mínimas requeridas en el numeral 2 anterior, por lo menos el 40% deberá corresponder a suministros realizados para clientes en América y/o la Unión Europea	IGUAL QUE FORMULARIO PLANILLA NO.2	IGUAL QUE FORMULARIO PLANILLA NO.2	. IGUAL QUE FORMULARIO PLANILLA NO.2	IGUAL QUE FORMULARIO PLANILLA NO.2	IGUAL QUE FORMULARIO PLANILLA NO.2

Nota: Como todos los antecedentes anteriores son de Europa y América, los contenidos de Planilla 3 será lo mismo que los de Planilla 2.

Kawara Trade S.A.

MANUAL

Kawara Trade S.A.

Seccionadores de CA de Alto Voltaje para uso intemperie de Tipo GW4C-252D (G•W)

Manual de Instalación
0SR.412.249.188416S

Jiangsu Rugao High Voltage Apparatus Co,Ltd.
2019.3

Kawara Trade S.A.

Índice

1 Generalidad
1.1 Modelo y nombre del producto
1.2 Uso y alcance aplibable del producto
1.3 Normas aplicables para la fabricación de este producto
1.4 Condición ambiental de uso
2 Especificaciones y parámetros técnicos principales
3 Característica estructural y principio de funcionamiento
4 Instalación y Depuración
4.1 Comprobación previa a instalación
4.2 Pasos de instalación de producto
4.3 Puesta en marcha de productos
5. Inspección y aceptación después de instalación y ajustación
5.1 Inspección y mantenimiento de rutina
5.2 Desmontaje de seccionador y sustitución de piezas principales
5.3 Desmontaje de equipos y sustitución de partes principales
6. Herramientas Necesarias
7. Aceptación y Almacenamiento
7.1 Proyecto de aceptación
7.2 Almacenamiento
8 Documentos, Accesorios y Repuestos Enviados junto con la Máquina
9 Información para Pedidos
10 Valor de Torque de Rosca Común de Acero de Conexión de Cada Tipo

Kawara Trade S.A.

Manual de Instalación

1 Generalidad

1.1 Modelo y nombre del producto

G W 4C - 252 D (G·W) / J □ - □

- Corriente nominal resistente de corta duración, KA
- Corriente nominal, A
- Actuador equipado de motor
- Montaje para altitudes mayores
- Equipado con el cuchilla de puesta a tierra
- Tensión nominal, kV
- Diseño No.
- Para el uso al aire libre
- seccionadores

1.2 Uso y alcance aplicable del producto

Este seccionador está aplicable en los circuitos de corriente alterna con frecuencia nominal de 60Hz, tensión nominal de 220kV, también se puede utilizar como unidad básica de los productos derivados de este serie.

Los seccionadores estarán equipados con el actuador eléctrico de tipo SRCJ2. Las cuchillas de puesta a tierra estarán equipadas con el actuador manual de tipo SRCS2.

1.3 Normas aplicables para la fabricación de este producto

a) Seccionador de Alta Tensión CA y Interruptor de Puesta a Tierra GB 1985-2014

b) Requerimientos Técnicos Comunes Para Normas de Celda de Alta Tensión y Equipo de Control GB/T 11022

c) Seccionador de Alta Tensión CA y Interruptor de Puesta a Tierra IEC62271-102

d) Requerimientos Técnicos Comunes Para Normas de Celda de Alta Tensión y Equipo de Contr

IEC60694

1.4 Condición ambiental de uso

Las condiciones ambientales deben cumplir con los siguientes requisitos:

a) temperatura ambiental	-50℃ ~ +50℃;
b) altitud	no superior a 2000m;
c) velocidad del viento	no superior a 34m/s;
d) espesor de hielo	no superior a 10mm;
e) intensidad sísmica	no superior al nueve grado;

Kawara Trade S.A.

f) nivel de contaminación del aire aplicable para el nivel IVo el nivel ¨e¨, ÿ las zonas contaminadas (de acuerdo con los requisitos del usuario);

g) sitio de instalación sin sustancias inflamable y explosivas y sustancias químicas corrosivas, sin vibración u oscilación frecuente e intensa;

h) intensidad de radiación solar 1000W/m2 (mediodía soleada).

2 Especificaciones y parámetros técnicos principales

Los datos técnicos principales sobre los seccionadores y cuchillas de puesta a tierra de la serie GW4C-252D (G•W) se muestran en la tabla 1:

Tabla 1

No.	Ítem	Unidad	Parámetros			
1	Tensión nominal	kV	245			
2	Nivel de aislamiento nominal					
	a) 1min tensión resistente de frecuencia (valor válido)					
	fractura	kV	530			
	para puesta a tierra	kV	460			
	Cuando la distancia alcanza la más corta durante el proceso de cierre del cuchilla de puesta a tierra	kV	291			
	b)tensión nominal resistente a impulse de rayo (valor pico)					
	fractura	kV	1200			
	para puesta a tierra	kV	1050			
3	Frecuencia nominal	Hz	50/60			
4	Corriente nominal	A	1250 ~ 2000	2500	3150	4000
5	Corriente nominal resistente de corta duración	kA	50			
6	Corriente nominal resistente de valor pico	kA	125			
7	Tiempo nominal de duración de cortocircuito					

Kawara Trade S.A.

	Seccionadores	s	3
	Cuchilla de puesta a tierra	s	3
8	Carga mecánica nominal de terminal		
	Carga longitudinal horizontal	N	1500
	Carga lateral horizontal	N	1000
	Fuerza vertical	N	1250
9	Capacidad de conmutación de seccionadores de corriente convertida de bus		
	1) tensión convertida	V	300
	2) corriente convertida	A	1600
	3) frecuencia de apertura y cierre	Vez	100
10	Capacidad de conmutación de cuchilla de puesta a tierra de corriente inductiva		
	1) corriente de inducción electromagnética (corriente/tensión)	A/kV	160/15 (80/2)
	2) corriente de inducción electrostática (corriente/tensión)	A/kV	10/15 (3/12)
	3) frecuencia de apertura y cierre	vez	10
11	Capacidad de conmutación de seccionadores de corriente pequeña		
	Tensión	kV	$252/\sqrt{3}$
	Corriente capacitiva	A	1
	Corriente inductiva	A	0.5
	Frecuencia de apertura y cierre	vez	5
12	Distancia de fuga	mm	≥6300、≥7812
13	Vida mecánica	vez	M1

Tabla1 (continuación)

No.	Ítem		Unidad	Parámetros			
14	Resistencia del circuito principal de seccionadores		μΩ	180	130	90	80
15	Modelo de actuador eléctrico			SRCJ2			
	Tensión del motor		V	AC380/DC220/DC110/AC220			
	Tensión del circuito de control		V	AC380/AC220/DC220/DC110/DC125			
16	Modelo de actuador manual			SRCS2			
17	Peso unipolar	No puesta a tierra	kg	410	418	430	440
		Puesta a tierra	kg	430	438	450	460

Kawara Trade S.A.

		monopolar					
		Puesta a tierra bipolar	kg	450	458	470	480

3 Característica estructural y principio de funcionamiento

Los seccionadores de tipo GW4C-252 es de estructura de ruptura central y fractura horizontal con doble columna, cada conjunto consta de tres seccionadores unipolares individuales (un poste principal y dos postes laterales). Los seccionadores se pueden equipar con cuchilla de puesta a tierra en un lado o dos lados. Los seccionadores tripolares están operados en vinculación por un actuador eléctrico de tipo SRCJ2, las cuchillas tripolares de puesta a tierra están operadas en vinculación por un actuador manual de tipo SRCS2.

Cada polo del seccionador está compuesto por la base, el aislador de soporte, la parte conductiva principal, el sistema de transmisión y la cuchilla de puesta a tierra (cuando sea necesario). En cuanto a la base de los seccionadores, está conectada por medio de los tubos de acero cuadrados y los alojamientos de los cojinetes utilizando los pernos. Dentro de los alojamientos de cojinetes está equipado con dos rodamientos rígidos de bolas con anillo de polvo, en la parte superior de los alojamientos de cojinete está la junta de sello de PTFE, en la parte inferior está la estructura de sello estático, con el fin de evitar que el polvo y la humedad entre en la cavidad del cojinete. Cada seccionador tiene dos columnas de aisladores de soporte. Cada columna se compone apiladamente de dos aisladores de varilla maciza, que están montados paralelamente en el alojamiento de cojinete.

La parte conductiva principal de los seccionadores está compuesta por dos brazos conductivos equipados con dedos o contactos (Figura 5). Los brazos conductivos están hechos de los perfiles de aluminio ranurados. Los dedos en los brazos conductivos del lado están equipados en pares, un extremo del dedo se fija en el brazo conductivo, el otro extremo del dedo aplica la presión contra el contacto por el medio del resorte de acero inoxidable y su propia fuerza, y se logra un contacto más fiable por medio de la energía eléctrica. El contacto en los brazos conductivos está hecho doblando con placa de cobre. En la parte de contacto está instalada una cubierta de blindaje con el fin de mejorar la distribución del campo eléctrico, y reducir el nivel de interferencia de radio. El extremo de salida está conectado con los brazos conductivos por medio de las líneas conductivas. Los brazos están instalados individualmente en la parte superior en los dos aisladores de soporte, se realizará el disparo y cierre con el giro de aislador de soporte de 90°.

Cuando los seccionadores están equipados con cuchilla de puesta a tierra, los contactos estáticos de las cuchillas de puesta a tierra equipados están fijados en los brazos conductivos de los seccionadores (Figura 5). Las varillas conductivas para las cuchillas de puesta a tierra están hechas con tubos de aluminio cuadrados, los dedos con estructura de tipo auto están fijados en la parte superior de las varillas conductivas de puesta a tierra. Las cuchillas de puesta a tierra son de tipo de acción de una vez, se realiza el cierre por medio de la deformación del panel táctil para que se conecte fiablemente el contacto dinámico y el contacto estático. En cuanto al diseño de estructura, se usa eficazmente la energía eléctrica para sujetar el conector estático y mantener la cuchilla de puesta a tierra en la posición de cierre, así que se obtiene una capacidad excelente de soportar la corriente del cortocircuito.

El actuador del motor de tipo SRCJ2 está compuesto por un motor, una caja de cambios de sello completo con doble turbina, un eje giratorio, los interruptores auxiliares y los componentes de control y protección del motor. La cáscara de la caja mecanismo está hecha remachando con placas de acero inoxidable. La caja mecanismo está equipada con dispositivo contra operación errónea, con el fin de lograr el enclavamiento de operación manual y la operación eléctrica, y lograr el antibloqueo que cuando no se puede realizar la operación eléctrica, se prohibirá la operación manual. La puerta de la caja mecanismo está equipada con un dispositivo de candado. La forma y las dimensiones de instalación del actuador del motor de tipo SRCJ2 se muestran en la Figura 6. La estructura y el principio de trabajo del actuador del motor de tipo SRCJ2 se debe consultar las instrucciones de instalación del actuador del motor de tipo SRCJ2.

La forma y las dimensiones de instalación del actuador manual de tipo SRCS2 se muestran en la Figura 7. El actuador está equipado con interruptores auxiliares y el dispositivo contra operación errónea. Cuando el actuador manual está equipado con cerradura electromagnética, no se desbloquea la cerradura electromagnética sólo cuando se reciba la señal de disparo o cierre, y el actuador podrá operar después de desbloquear la cerradura electromagnética con llave especial. El parador de posicionamiento de cerradura electromagnética obtiene la función de reajuste automático, se bloqueará el actuador automáticamente al finalizar la operación.

Como se muestra en la Figura 9-12, los seccionadores tripolares instalados en el mismo plano horizontal pueden ser conectados con las varillas horizontales y uniones, que formarán la vinculación trifásica, que puede realizar la operación de disparo y cierre por un actuador. El actuador está instalado en la fase B. Se puede operar los seccionadores inmediatamente después de conectar el eje operativo y el eje giratorio del actuador por medio de los tubos de acero y las uniones.

Cuando los seccionadores tripolares están equipados con interruptores de puesta a tierra, se puede realizar la vinculación tripolar con sólo un tubo de acero. Se realiza el enclavamiento mecánico entre los seccionadores y la cuchilla de puesta a tierra por medio de discos con muescas y placas de bloqueo con polos en los ejes de operación respectivos. Se debe asegurarse de que no cierre la cuchilla de puesta a tierra cuando los seccionadores están en la posición de cierre; no cierre los seccionadores cuando las cuchillas de puesta a tierra están en la posición de cierre.

Cuando el actuador manual está equipado con cerradura electromagnética, la cerradura electromagnética no desbloquea sólo cuando está energizada, y se podrá operar el actuador, El parador de posicionamiento de cerradura electromagnética obtiene la función de reajuste automático, se bloqueará el actuador automáticamente al finalizar la operación.

4 Instalación y Depuración

4.1 Comprobación previa a instalación

Los seccionadores deben ser enviados en paquete por grupo con el fin de facilitar el embalaje y transportación. Se debe contar e inspeccionar las piezas y accesorios de acuerdo con la lista de embalaje antes de la instalación. Antes de la instalación se debe inspeccionar:

a) Los datos de la placa de identificación deberán ser coherentes con el orden;

b) La apariencia de los productos debería estar sin daños, el aislador debería sin daños, y las uniones no debería ser sueltas;

c) Cada sujetador que fija las uniones no debería ser suelta;

d) Los ejes operativos y cada parte giratoria deberían ser flexibles, sin fenómeno de captura;

e) La operación del actuador debería ser flexible, la posición de disparo y cierre debería ser correcta, los interruptores de carrera e interruptores auxiliares deberían ser capaces de cambiar correctamente.

4.2 Pasos de instalación de producto

Estos seccionadores sólo se adaptan a la instalación horizontal, se debe realizar la instalación consultando con la Figura 9 ~ 12. Las maneras de cuelga de cada pieza se muestran en la Figura 13.

Instalación de base. Se debe fijar cada seccionador monopolar en la base de instalación del mismo nivel (los pernos de tipo M20×60 para instalación deben ser preparados por el usuario), cuando se equipado con cuchilla de puesta a tierra, se debe colocar los ejes giratorios de la cuchilla tripolar de puesta a tierra en una línea recta. Se debe inspeccionar que si es horizontal la superficie de brida del aflojamiento de cojinete en los dos extremos de la base. Se puede aflojar los pernos de montaje cuando sea necesario, y ajustar el nivel con juntas hasta que la superficie de brida sea horizontal en ambas direcciones.

En cuanto a la instalación de los aisladores, se debe utilizar los pernos (con tuercas, arandelas planas y arandelas de resorte) de tipo M16×65 para conectar y montar los aisladores superiores e inferiores como una columna de aislador, y luego se debe fijar los aisladores en la brida del aflojamiento de cojinete con los pernos (con tuercas, arandelas planas y arandelas de resorte) de tipo M16×65. Se debe inspeccionar que si las bridas de aisladores están horizontales en ambas direcciones. Cuando sea necesario, se puede aflojar los pernos de tipo M16×65 y ajustar el nivel con juntas (se muestra en Figura 14). Se debe medir la distancia entre centros de los dos aisladores de cada polo y deben asegurarse de 2650±3mm.

En cuanto a la instalación de los brazos conductivos, se debe levantar cuidadosamente los brazos conductivos, y fijarlos en los aisladores con pernos de tipo M16×55 (con tuercas, arandelas planas y arandelas de resorte). Durante el proceso de instalación, deben asegurarse de que los brazos conductivos son horizontales en el mismo nivel cuando está en la posición de cierre. En la Figura 15, se han mostrado unos estados de instalación correctos e incorrectos.

Se debe fijar el actuador eléctrico debajo del seccionador de polo operativo de acuerdo con las dimensiones del diagrama de instalación. Coloque el seccionador en la posición de cierre, también el actuador en la posición de cierre, y luego sujeta la varilla vertical con uniones (se debe reservar un poco de margen de longitud de las varillas verticales en la parte superior del actuador en fábrica, con el fin de adaptar a las diferentes alturas de instalación para los usuarios, se toma la distancia entre el punto A mostrado en esquema del actuador y el centro de pasador del eje de conexión como la longitud de varilla vertical). En cuanto al seccionador manual de disparo y cierre, se debe asegurar que el ángulo entre el brazo conductivo y la línea central de base dentro del rango de 90°después de aislar el seccionador. Al cerrar, el contacto y el dedo deben estar en la posición normal de contacto.

La distancia central del brazo actuador del seccionador principal es ajustable, la distancia central es de 155mm después de alinear la marca en el brazo, si el ángulo de abertura del brazo conductivo en el lado actuador del seccionador principal (el lado de dedos) del polo B (polo operativo) es menor a 90°, se puede aumentar la distancia central del brazo, de lo contrario, reducir la distancia central. Como se muestra en la Figura 1.

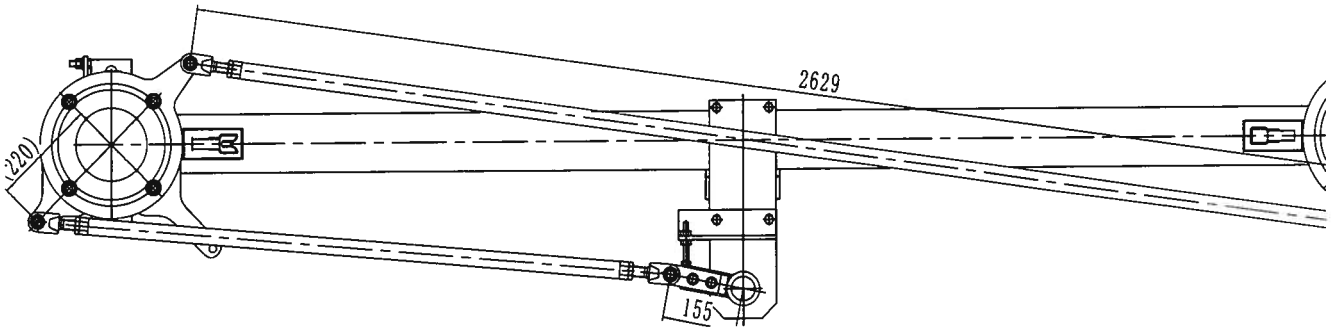

Figura 1 Esquema de Base Monopolar (posición de cierre)

En este momento, cierre el seccionador, verifique que si la posición de contacto de los contactores y los dedos cumplen con los requisitos (se muestra en Figura 2a), si se encuentra la situación mostrada en la Figura 2b y Figura 2c, en primer lugar, se debe asegurar que la longitud de varilla entre los aisladores es de 2629±1 (la longitud teórica de varilla entre los aisladores es de 2629mm), se puede ajustar la posición del aislador y el brazo mediante el ajuste de la brecha entre los pernos y orificios en el punto A,B y C mostrado en Figura 9 para lograr el efecto mostrado en Figura 2a. Las medidas específicas son: si se encuentra la situación mostrada en Figura 2b, se puede aumentar la distancia central entre los dos brazos conductivos; si se encuentra la situación mostrada en Figura 2c, se puede reducir la distancia central entre los dos brazos conductivos.

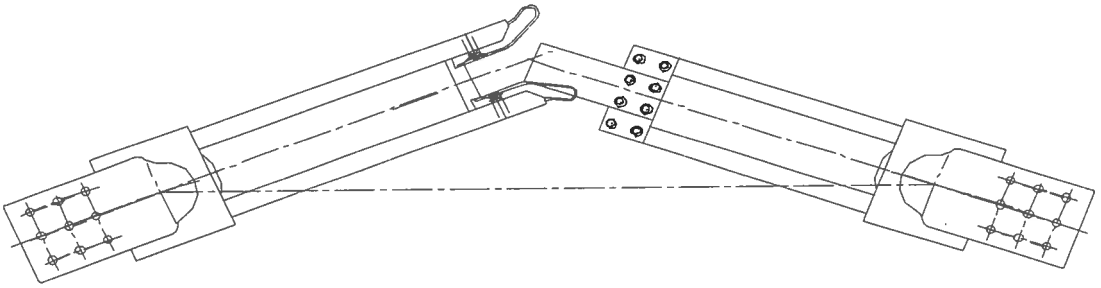

a) Correcto

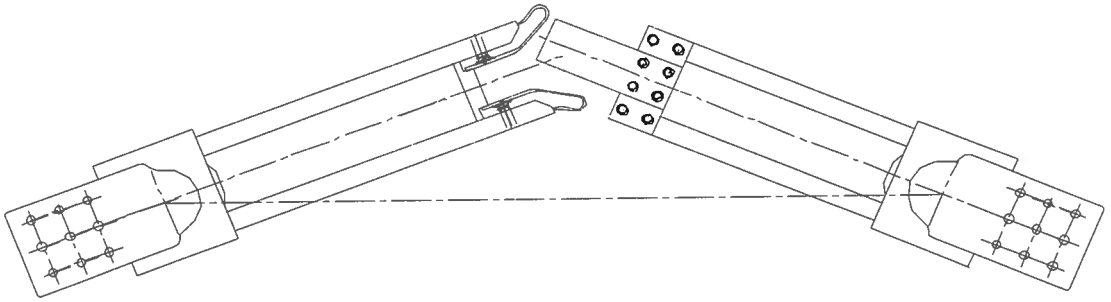

b) Erróneo

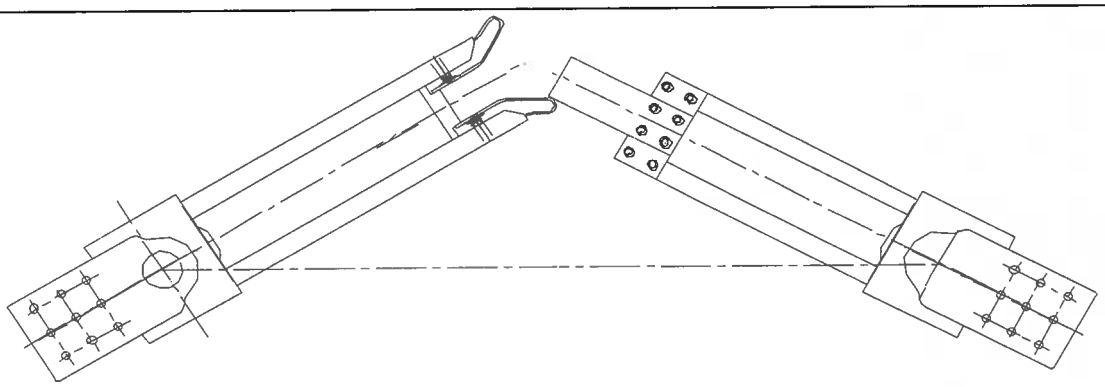

c) Erróneo

Figura 2 Figura de posición de cierre recién del circuito conductivo

Se debe realizar una operación completa de disparo y cierre sobre los seccionadores después de finalizar el ajuste, con el fin de asegurar de que los brazos conductivos izquierdo y derecho están en una línea recta, y la deformación de los ambos dedos es sustancialmente igual (se muestra en Figura 3) cuando está en la posición de cierre. Se debe comprobar el ángulo de abertura en el lado accionado (el lado de contacto), si es superior a 90°, se puede aumentar la distancia central del brazo accionado mostrado en Figura 1 (manera: se puede ajustar la posición de pasador excéntrico en el lado accionado); si es menor a 90°, se puede reducir la distancia central del brazo accionado mostrado en Figura 1.

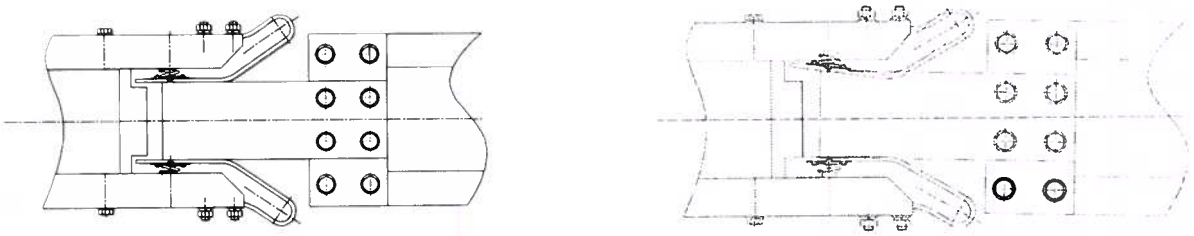

a) Correcto b) Erróneo

Figura 3 Cierre de los contactos hembra y macho

Al cerrar, se debe asegurar la brecha de 20±10 mm entre el conector y la base de dedos (como se muestra en Figura 4), cuando sea necesario, se puede aflojar los pernos de tipo M8 de los contactos (secuencia 4) fijos en el brazo constructivo del lado derecho, se debe desplazar el contacto para lograr el tamaño mencionado anterior (contactos fijados por agujero largo), al mismo tiempo se debe garantizar el contacto fiable entre los contactos y cada par de dedos, la superficie de contacto no puede ser menor al 2/3 de línea de contacto (detectado con palpador de 0.05), las situaciones de los contactos y dedos se muestran en la Figura 4.

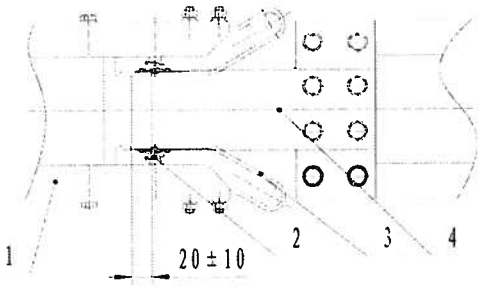

1. Fila conductiva 2. Resorte 3. Dedos 4. Contacto

Figura 4 Figura de Área de Contacto de Contactos y Dedos

La distancia central del brazo de vinculación trifásica de los polos de A, B (fase no operativa) también es de tipo ajustable, que controla respectivamente el ángulo de cierre de cada polo. Afloje los pernos del brazo al ajustar, si el ángulo de disparo y cierre es menor a 90°, se puede reducir la distancia central del brazo, de lo contrario, aumentar la distancia central. La posición de ajuste específico se muestra en Figura 1.

Si se equipa la cuchilla de puesta a tierra, se debe instalar el actuador manual debajo del seccionador de polo operativo, e instalar bien las varillas verticales igual como los seccionadores.

4.3 Puesta en marcha de productos

La depuración de vinculación tripolar del seccionador se muestra en Figura 18.

Se debe realizar el ajuste de vinculación tripolar después de finalizar la depuración de seccionador de polo operativo.

En primer lugar, se debe colocar el seccionador monopolar en la posición de cierre, y conectar el polo principal y el polo lateral con la varilla de vinculación entre polos. En cuanto a los seccionadores manuales, los tres polos deben abrirse y cerrarse en su lugar al mismo tiempo, y los contactos dinámicos y estáticos se conectan bien, en este momento, la distancia de cierre del seccionador tripolar debe ≤20mm. Cuando sea necesario, se puede ajustar la varilla de vinculación entre fases, y realizar la operación de disparo y cierre manualmente para revisar la posición de abertura y cierre, la posición de los contactos y la sincronización del cierre tripolar (método de medición: cuando el contacto de cualquier polo conecta con el dedo, se mide la distancia entre los contactos de otros polos y el dedo).

Instalación de cuchilla de puesta a tierra y calibración de vinculación tripolar (se muestra en Figura 18)

Se debe desbloquear el tope en el soporte de la cuchilla de puesta de tierra, e instalar el tubo de conexión tripolar de la cuchilla de puesta a tierra en el producto. Al instalar, se debe poner respectivamente el brazo impulsado, el tubo conductivo, el anillo de tope, el resorte de equilibrio y pieza de posicionamiento de la cuchilla de puesta a tierra en los tubos, y luego conectan los dos tubos con uniones. Con el fin de reducir el par de operación, mejorar la consistencia de acción de cierre y asegurar

la operación flexible de disparo y cierre, se debe instalar bien el resorte de torsión en los dos polos laterales para equilibrar el par de acuerdo con lo mostrado en Figura 10, 11, 12, al instalar el resorte de torsión, se debe realizar una cierta deformación previa.

Cuando el cuchilla de puesta a tierra está en posición de disparo, mientras que el actuador está en la posición de disparo, se debe conectar el brazo impulsado del cuchilla de puesta a tierra según el ángulo de 35°mostrado en Figura 18. Cuando el seccionador está en la posición de disparo, opera el cuchilla de puesta a tierra manualmente, cuando el cuchilla de puesta a tierra está en la posición de cierre, se debe asegurar de que el conector estático sobresale 10～15mm debajo del conector dinámico (se muestra en Figura 16). Cuando el cuchilla de puesta a tierra no se cierra en su lugar, se puede ajustar el ángulo entre el brazo impulsado y la dirección horizontal, con el fin de reducir un poco el ángulo, cuando sea necesario, se puede aflojar los pernos del brazo impulsado y ajustar la distancia central del brazo para que la posición de disparo y cierre sea correcta.

Cuando se opera el seccionador y cuchilla de puesta a tierra, se debe prestar atención en la situación de acción de enclavamiento mecánico. Cualquier operación errónea podrá dañar piezas de enclavamiento y el actuador.

Cuando el seccionador está en posición de disparo, se opera manualmente la cuchilla de puesta a tierra de vinculación tripolar. Se debe realizar el ajuste apropiado para que la acción de disparo y cierre de la cuchilla de puesta a tierra tripolar sea sincronizada y consistente. Finalmente, se debe fijar la unión suave de la cuchilla de puesta a tierra en el terminal de puesta a tierra en la base del seccionador.

5. Inspección y aceptación después de instalación y calibración

Se debe medir respectivamente las siguientes dimensiones después de finalizar el ajuste del seccionador:

a) La distancia neta de aislamiento de aire del seccionador hacia tierra no puede ser inferior a 2.1m;

b) Después del disparo de seccionador, la distancia neta de aislamiento de aire para fractura no puede ser inferior a 2.2m;

c) Después del disparo de seccionador, toda la distancia neta de aislamiento de aire entre las fases no puede ser inferior a 2.2m;

d) La distancia entre fases no puede ser inferior a 4m;

e) Cuando el seccionador conecta al bus, la brecha entre contactos y dedos debe cumplir con 20±10 mm.

Se debe operar 3～5 veces manualmente el seccionador y cuchilla de puesta a tierra, la acción debería ser estable, la posición de disparo y cierre debería ser correcta, el contacto debería ser bueno.

Atención: al operar el seccionador, la cuchilla de puesta a tierra debe estar en la posición de disparo; al operar la cuchilla de puesta a tierra, el seccionador debe estar en la posición de disparo.

Después de 5 veces de operación del seccionador bajo presión nominal del motor, y 3 veces de operación respectivamente bajo la 85% presión nominal y la 110% presión nominal, no se deberá encontrar fenómenos anormales, y la posición de disparo y cierre será correcta, el contacto será bueno, la sincronización de tres polos no supera a 20mm, el cambio de contacto del interruptor auxiliar del actuador deberá cumplir con requisitos, el enclavamiento mecánico accionará fiablemente.

Atención: se debe colocar el actuador en la posición central entre disparo y cierre antes de energizar, y luego conecte con la energía, pulse el botón de cierre o disparo para observar que si la dirección giratoria del eje principal del actuador y del seccionador sean correctas, si la dirección es opuesta, se debe impulsar inmediatamente el botón de parada, cortar la energía, cambiar cualquieras dos líneas de entrada de alimentación del motor para cambiar la secuencia de fase.

Cuando se cierra el seccionador, los contactos dinámicos y estáticos deben ser buenos, mientras tanto, miden la resistencia del circuito principal. Se recomienda medir con el método de caída de tensión de DC (se recomienda la corriente de 100A). El valor de resistencia del circuito entre los dos terminales del seccionador no puede superar el valor especificado en la secuencia 14 de Tabla 1.

Se debe inspeccionar que si todas las partes de movimiento relativo como transmisión, rotación, etc. son lubricantes, si los pernos están apretados.

Se debe aplicar vaselina sobre los contactos y dedos del seccionador y los contactos dinámicos y estáticos de la cuchilla de puesta a tierra para protegerlos.

Mantenimiento y Reparación

5.1 Inspección y mantenimiento de rutina

Este seccionador no necesita el mantenimiento especial. Sin embargo, con el fin de garantizar el funcionamiento normal del equipo, se recomienda realizar la inspección y mantenimiento regular, sobre todo para las piezas desgastadas fácilmente. Con el fin de garantizar la válida de los parámetros del seccionador, se debe realizar la inspección y mantenimiento regular de acuerdo con la Tabla 3, Mantenimiento Preventivo, se debe manejar las averías de acuerdo con la Tabla 4, Determinación de Averías Normales y Su Tratamiento.

5.2 Desmontaje de seccionador y sustitución de piezas principales

5.2.1 Desmontaje de seccionador

¡Advertencia! Antes de realizar las siguientes operaciones, se debe asegurar:

a) El seccionador está en la posición de disparo;

b) Está confirmado que todas las líneas de entrada y salida de alto voltaje están puestas a tierra visualmente;

c) El actuador está desconectado con todos los cables de bajo voltaje.

5.2.1.1 Desconectar

a) Desconecte los cables de alto voltaje de panel de terminales;

b) Desconecte los cables de bajo voltaje del actuador.

5.2.1.2 Desmontar

Se debe realizar el desmontaje con las herramientas iguales para instalar el seccionador según el siguiente orden:

a) Desmonte la varilla de transmisión horizontal;

b) Desmonte el brazo conductivo;

c) Desmonte la varilla conductiva de la cuchilla de puesta a tierra;

d) Desmonte los terminales;

e) Desmonte el actuador (Caja de control) y la varilla operativa vertical;

f) Desmonte la base fija;

Se debe clasificar y colocar todas partes después de finalizar el desmontaje.

5.3 Desmontaje de equipos y sustitución de partes principales

¡Advertencia! Antes de realizar las siguientes operaciones, se debe asegurar:

a) El seccionador está en la posición de disparo;

b) Está confirmado que todas las líneas de entrada y salida de alto voltaje están puestas a tierra visualmente;

Atención: cuando se reemplazan las piezas conductivas, se debe realizar el tratamiento sobre las superficies de contacto fijo y permanente (por ejemplo, la superficie de contacto entre el panel de terminales y el soporte de contacto estático):

a) Se debe eliminar cualquier marca de grasa en las superficies mencionadas anterior con tricloroetileno o cloruro de vinilo, y eliminar el óxido con cepillo de alambre de acero inoxidable o papel de lija fina;

b) Se debe aplicar grasa conductiva;

c) Se debe conectar estas dos superficies lo antes posible.

Tabla 2 Tabla de Mantenimiento Preventivo

Estado del seccionador	Se debe realizar el trabajo según requisitos pertinentes de instalación	Método de control previo
A - operando el seccionador	Inspección simple	Durante el proceso de inspección de sitio o por cada 2 años
	A1) las partes mecánicas del equipo no estén dañadas A2) las partes de contacto de contactos y dedos	

	tienen brillantes de plata, la resistencia del circuito no supera al valor especificado en Tabla 1 A3) la cubierta externa de los cables de bajo voltaje y los cables de puesta a tierra no estén dañados A4) los terminales no estén dañados y con una superficie sin sucio y deposición A5) el actuador no está dañado A6) se debe inspeccionar la situación de calentado del calentador del actuador utilizando el termómetro	
B - dejar de operar	Mantenimiento del seccionador	Por cada 5 años o por cada 4000 veces de operación
	B1) realice la inspección de artículo 1-2-3 de parte A B2) inspeccione todas partes conductivas B3) mida la resistencia del circuito principal conductivo B4) inspeccione el grado de apriete de los pernos B5)inspeccione la operación local B6) inspeccione la operación manual B7) inspeccione la situación de acoplamiento de contacto principal B8) inspeccione la situación de superficies de los contactos B9) inspeccione que si todas partes mecánicas y eléctricas, los cables y la conexión de puesta a tierra están dañados B10) inspeccione la situación de acción del acatador B11) inspeccione las operaciones de las siguientes partes eléctricas . enclavamiento eléctrico . disyuntor miniatura (tirado hacia arriba y abajo, el contacto del disyunto miniatura es bueno) . contacto (la bobina de contacto se energiza y cada punto de contacto conectará bien) . botón (se pulsa el botón, el contacto del botón será bueno) . interruptor auxiliar(se gira el interruptor auxiliar, los nodos de cada grupo conectarán bien) . interruptor de carrera (se conecta bien)	
C – dejar de operar	reparación completa	Por cada 10 años o por 10000 veces de operación

Kawara Trade S.A.

	C1)inspeccione completamente de acuerdo con cada artículo de Parte B C2) inspeccione las partes principales, situación de desgaste, la situación de los terminales y el ajuste mecánico realizado durante el proceso de instalación. Si se encuentra cualquier desviación, se realizará la recuperación. Si se encuentra dudas en la forma de recuperación, póngase en contacto con la empresa.	

Kawara Trade S.A.

Plan de Mantenimiento Preventivo del Seccionador con Garantía de 10000 Veces de Operación

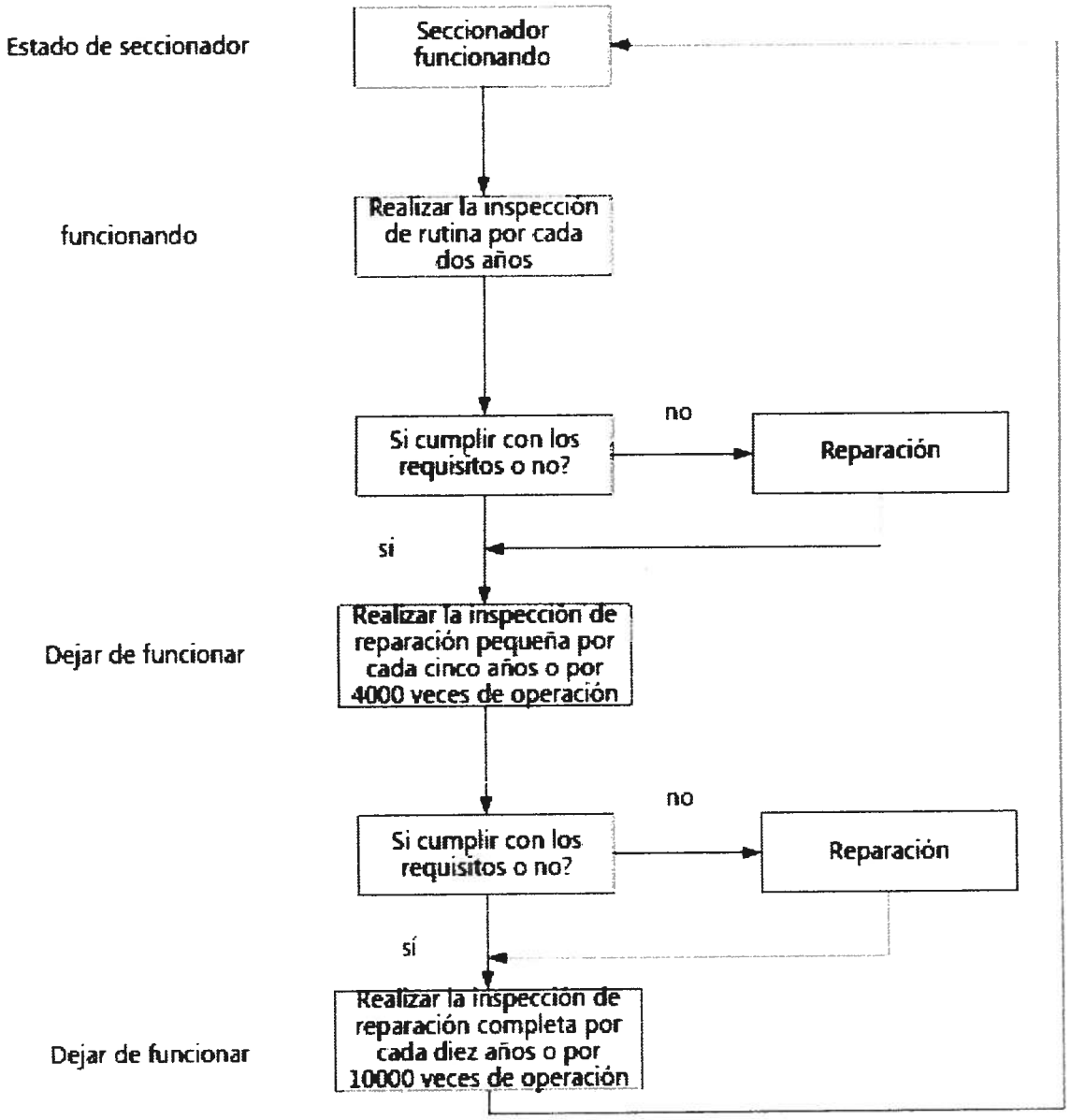

Tabla 3 Determinación y Tratamiento de Averías

Tipo de avería		Causas posibles	Criterio de determinación y método de inspección	Tratamiento
Parte de transmisión de la base	El cuchillo principal no está en su lugar correcto	La varilla de transmisión entre fases está deformada o la unión está suelta	Inspeccione visualmente la varilla de transmisión y la unión	Compruebe la causa y elimine los defectos correspondientes

Kawara Trade S.A.

Tipo de avería		Causas posibles	Criterio de determinación y método de inspección	Tratamiento
	El cuchillo principal no está en su lugar correcto	Los sujetadores están sueltos y deslizantes	Ajustarlos utilizando la llave de torsión	Vuelva a ajustar la posición de cierre de la cuchilla de puesta a tierra para apretar los sujetadores
	Cuando se gira el actuador, no accionará el producto	No se ha apretado los pernos según los requisitos sobre esfuerzo de torsión o no se han montado los tornillos de fijación	Ajustarlos utilizando la llave de torsión	Inspeccione
	Se aumenta el par de operación manual	La parte giratoria del sistema de transmisión falta de lubricante, los lodos de aceite son excesivos, el pasador del eje está oxidado, que causar el aumento de resistencia a la transmisión	Se aumenta la resistencia durante la operación	Limpie y lubrique las piezas giratorias
Parte superior conductiva	La parte de contacto está oxidada	El contacto del contacto no está bueno que causa el calor	Inspeccione visualmente que si se encuentra fenómeno de quema en la parte de contacto o mida la temperatura con termómetro infrarrojo	Limpie y elimina la suciedad de la superficie, reemplace o repare cuando se quema
otros	No acciona por control remoto	El interruptor remoto/ local está en el lugar local	Inspeccione las señales para ver si se encuentran señales de control o señales de desconexión	Cambie a remoto
	No acciona por control remoto ni el control local	Algunas piezas o componentes del circuito están dañados	Inspeccione el circuito de apertura y cierre del actuador eléctrico equipado para el seccionador	Detecte los componentes defectuosos y los reemplace
		Los cables están sueltos, el actuador o el interruptor auxiliar están dañados	Inspeccione el circuito de apertura y cierre del actuador eléctrico equipado para el seccionador	Detecte los cables sueltos, conecte de nuevo los cables

Kawara Trade S.A.

Tipo de avería		Causas posibles	Criterio de determinación y método de inspección	Tratamiento
	No hay señal de estado de interruptor	Los cables de los interruptores auxiliares no conectan correctamente o los interruptores auxiliares están dañados	Inspeccione que si los interruptores auxiliares están dañados después de confirmar que el cableado es correcto	Inspeccione o reemplace los interruptores auxiliares
	No acciona el actuador eléctrico	Falta de fase de alimentación	Se encuentra sonido ¨zumbido¨ en el motor, pero no acciona	Elimine la falta de fase
		El motor está dañado	El poder es correcto, pero no acciona el motor	Reemplace el motor
		El interruptor de carrera está dañado	Inspeccione el cableado con un multímetro	Reemplace el interruptor de carrera
	El ángulo de salida del actuador eléctrico está cambiado	La pieza de posicionamiento mecánico está dañada	Inspeccione visualmente por medio de eje de mano	Reemplace la pieza de posicionamiento
		El interruptor de carrera está dañado o la desconexión es demasiada temprana	Inspeccione visualmente por medio de eje de mano	Reemplace el interruptor de carrera o ajusta su tiempo de cambio

6. Herramientas Necesarias

Se debe equipar completamente con las herramientas generales para la instalación y mantenimiento de los seccionadores, tales como llave de horquilla, llave de buje, llave de torque hasta 200N.m, destornillador, alicate, martillo, nivel, cinta métrica.

Un coche grúa equipado con suficientes eslingas y anillos es suficiente para levantar la unidad más pesada.

No se necesitan herramientas especiales.

7. Aceptación y Almacenamiento

7.1 Proyecto de aceptación

El usuario debe realizar la aceptación según el proyecto de aceptación dentro de dos semanas al recibir los productos, el proyecto de aceptación se muestran en la siguiente:

Kawara Trade S.A

Al recibir cajas de embalaje, se debe comprobar inmediatamente los contenidos de cada paquete, para asegurarse de que todos los contenidos listados en la lista de embalaje están completos sin daños.

Si se encuentran daños de los artículos o discrepancia con la lista de embalaje, se debe notificar a Jiansu Rugao High voltage Apparatus Co,Ltd.

Si se necesita el transporte de tránsito o el almacenamiento de largo plazo después de la aceptación, se debe restaurar la caja de embalaje a su estado original.

Al cargar, descargar y levantar las cajas de embalaje, se debe tener cuidado de no dañar los equipos.

7.2 Almacenamiento

7.2.1 Almacenamiento de corto plazo (dentro de 3 meses)
Se debe colocar los paquetes en el lugar seco y protegido. Si está al aire libre, asegúrese de que el drenaje es bueno.

En cuanto al almacenamiento al aire libre, se debe garantizar una buena luz de sol. Y se debe colocar madera debajo de las cajas de madera, la distancia del suelo por lo menos de 15cm.

Si el plazo de almacenamiento no supera a 3 meses, no es necesario encender el calentador de anti condensación del actuador.

7.2.2 Almacenamiento de largo plazo (más de 3 meses)
En este caso:
Si el equipo se almacena en el interior, y el almacén es seco, se inspeccionará por cada 6 meses el actuador para asegurar que no hay humedad en el interior.
Si el equipo se almacena al aire libre o en el almacén húmedo, consultará el programa recomendado en la Sección 9.2.1, y mantendrá la alimentación del calentador de anti condensación del actuador.

8 Documentos, Accesorios y Repuestos Enviados junto con la Máquina

Cada grupo de seccionador y cuchilla de puesta a tierra de fábrica está enviado junto con accesorios para la instalación y conexión y el actuador pedido por el usuario.

Cada grupo de seccionador y cuchilla de puesta a tierra de fábrica está adjuntado con cada copia de los documentos, tales como el certificado de producto, instrucciones de instalación, lista de embalaje, tabla de accesorios, etc.

9 Información para Pedidos

Al hacer pedido, se debe indicar el tipo de producto, el nombre, la corriente nominal, tensión nominal, equipado con la cuchilla de puesta a tierra o no, etc.

En cuanto al pedido de seccionador equipado con cuchilla de puesta a tierra, se debe indicar claramente: puesta doble a tierra o puesta individual a tierra.

Se debe indicar el tipo, nombre, tensión del motor, tensión de control del actuador, etc.

Si está equipado con cerradura electromagnética, se debe indicar el tipo de alimentación y el grado de tensión para la cerradura electromagnética equipada en el actuador.

Para obtener los documentos técnicos aparte del Capítulo 9, se debe indicar al hacer pedido.

Nota 1: si hay requisitos especiales sobre el seccionador y el actuador equipado, se debe indicar al hacer pedido.

Nota 2: nuestra empresa puede equipar el soporte de acero base según el pedido del usuario, si el usuario no tiene requisitos especiales, suministrará según la estructura mostrada en Figura 17

10 Valor de Torque de Rosca Común de Acero de Conexión de Cada Tipo

Tabla 5 Par de Apriete de Perno y Tornillo (nivel de 4.8, para referencia)

Tipo de perno	Par de apriete de perno inoxidable/ galvanizado en caliente (N.m)
M6	8
M8	18
M10	37
M12	63
M16	157
M20	286
M22	391
M24	508
M36	1596

Tabla 5 Lista de Punto de Inspección para Calificado de Depuración en Sitio por Personal de Servicio Sobre Seccionador de Alta Presión de AC al Aire Libre de Tipo GW4C-252D (G·W)

Nombre de Proyecto:

Personal de Servicio: Fecha de Servicio:

No.	Ítem de inspección puntual	Requisitos técnicos	Resultados de Inspección	
			Calificado (√)	No calificado (×)
1	Apariencia de producto	La superficie no tiene defectos por impactos y daños		
2	Accesorios y documentos de fábrica	Los accesorios y documentos de fábrica deben ser completos.		
3	Pernos de conexión y pasadores de chaveta para Partes conductivas y partes de base	Los pernos no están sueltos y caídos, el pasador de chaveta no tiene rastros de fractura		
4	Cuchillo conductivo	Se debe confirmar que la dirección de levantamiento de la cuchilla sea correcta de acuerdo con la placa de señal lateral del lado de cuchillo		
5		Los pernos de apriete del cuchillo no están sueltos		
6		Se debe confirmar que el cuchillo fijo está conectado fijamente con los pernos del aislador de porcelana giratorio		
7	Contacto de contactor	Al cerrar, la brecha entre el contacto y la base de dedos es de 20±10 mm, se debe confirmarla de nuevo después de conectar al bus		
8		Después de cerrar en su lugar correcto, la cantidad de compresión por el cuchillo sobre el dedo izquierdo y derecho no tiene diferencia significativa		
9		No se encuentra fenómeno de captura significativa durante el proceso de apertura y cierre del cuchillo		
10		El contacto del cuchillo y dedos es fiable, entre las partes de contacto no existen brechas, la resistencia de contacto no supera a 8μΩ		
11		Cuando la parta conductiva está en posición de		

No.	Ítem de inspección puntual	Requisitos técnicos	Resultados de Inspección	
			Calificado (√)	No calificado (×)
		disparo, los dedos de contacto estático deben estar restablecidos		
12	Aislador de soporte y aislador operativo	La brida superior del aislador debe conectar fiable con la parte conductiva, la brida inferior debe conectar fiable con la base, la conexión entre las secciones superior e inferior deben ser fiables		
13	Parte de transmisión de base	La base está conectada fijamente con la superficie de instalación del soporte		
14		La parte de transmisión del aislador no está suelta, y la conexión es fiable		
15		Al cerrar el brazo principal de la base pasa el punto muerto		
16		Los pernos de apriete de las uniones de varilla de vinculación tripolar está fiables, no sueltos, las tuercas ajustables en los ambos extremos de varilla de vinculación tripolar están apretadas		
17	Parte de cuchillo de puesta a tierra	La presión de contacto de los contactos dinámicos y estáticos debe ser adecuada y fácil de abrir		
18		Al abrir, el cuchillo de puesta a tierra se inclina ligeramente hacia arriba		
19		Las uniones de tubos de conexión de cuchilla de puesta a tierra deben estar fijadas, los pernos deben estar fijados, las tuercas ajustables en los ambos extremos de varilla entre los tubos de conexión del cuchilla de puesta a tierra y el brazo deben estar fijadas, los pernos de apriete del brazo ajustable deben ser fiables y fijados		
20		Se debe ajustar el resorte de balance en la posición de cierre para asegurar que el resorte no producirá una fuerza de reacción		
21		El tubo conductivo de cuchillo de puesta a tierra está conectado con los tubos de conexión de cuchilla de puesta a tierra apretadamente y fiablemente, antideslizantemente		
22	Enclavamiento mecánico	El enclavamiento debe ser fiable, la placa deslizante del enclavamiento transmita flexible, sin		

Kawara Trade S.A.

No.	Ítem de inspección puntual	Requisitos técnicos	Resultados de Inspección	
			Calificado (√)	No calificado (×)
		captura		
23	Actuador	La posición de apertura y cierre del actuador es correcta		
24		La base del actuador y los tubos operativos son fiables, sin fenómeno deslizante		
25		Al abrir y cerrar, la señal enviada por el interruptor auxiliar debe ser correcta		
26		En cuanto a la operación manual de apertura y cierre, el pasador de posicionamiento mecánico debe ser capaz de fijarse		
27	Sincronización	La sincronización del cuchillo principal de puesta a tierra no debe superar a 20mm		
28	Resistencia del circuito principal	La resistencia del circuito de 1250 ~ 2000ª no supera a 180μΩ		
		La resistencia del circuito de 2500A no supera a 130μΩ		
		La resistencia del circuito de 3150A no supera a 90μΩ		
		La resistencia del circuito de 4000ª no supera a 80μΩ		

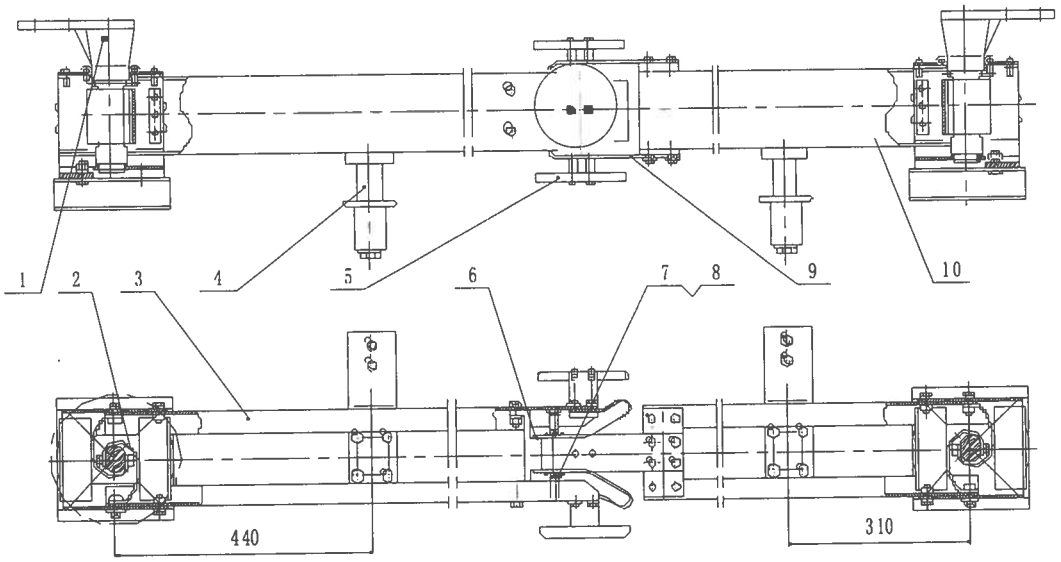

1. terminal 2. Cinta conductiva 3. Brazo conductivo del lado de dedos 4. Contacto estático de puesta a tierra 5. Cubie 10. Brazo conductivo del lado de contacto

Kawara Trade S.A.

Figura 5 Estructura de Parte conductiva del Seccionador

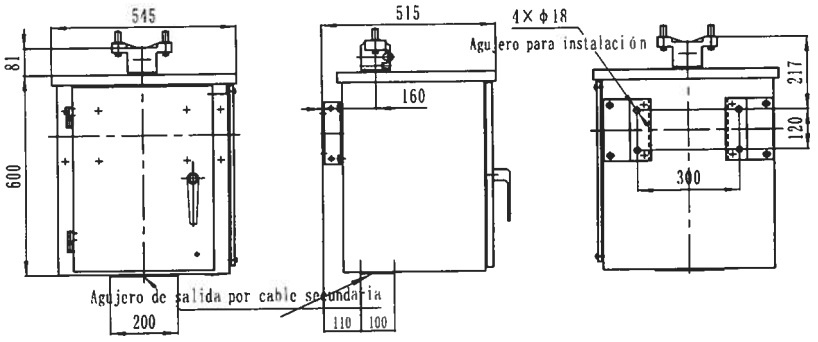

Figura 6 Figura de Forma y Dimensión de Instalación del Motor de Tipo SRCJ2

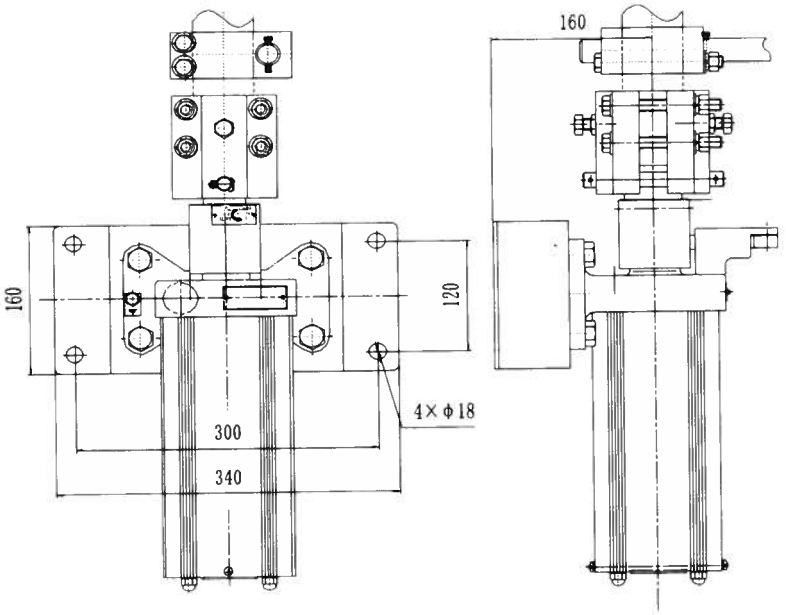

Figura 7 Forma y Dimensión de Instalación del Actuador de tipo SRCS2

Kawara Trade S.A.

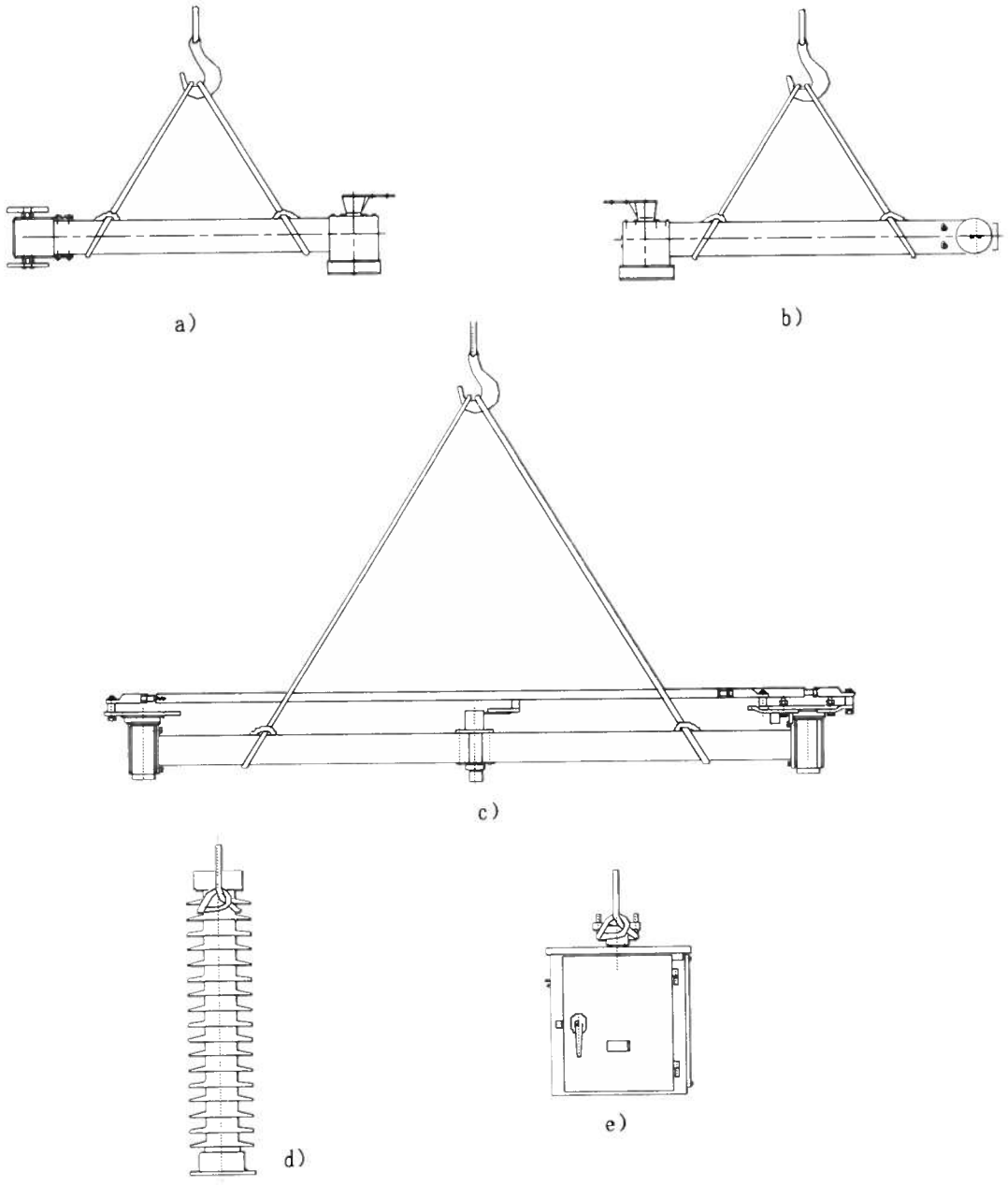

Figura 13 Esquema de Levantamiento de Cada Piezas

Kawara Trade S.A.

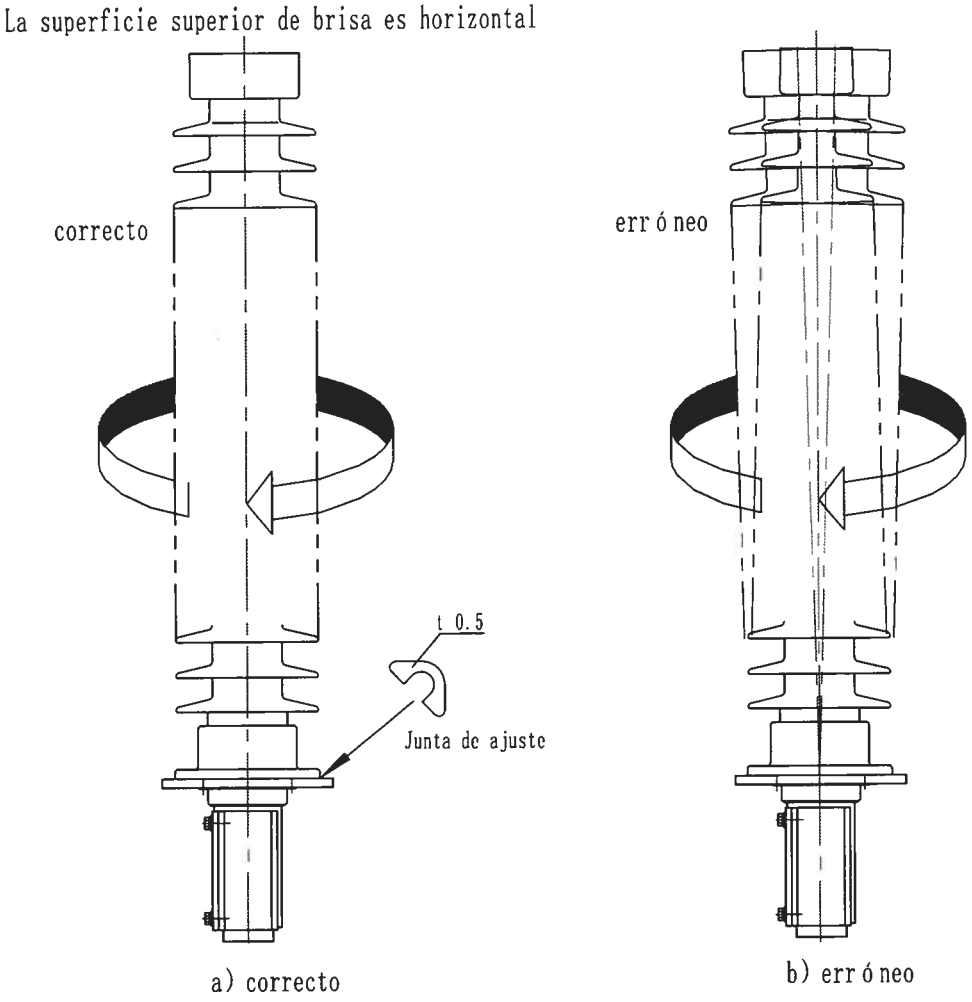

Figura 14 Esquema de Instalación de Aislador

Kawara Trade S.A.

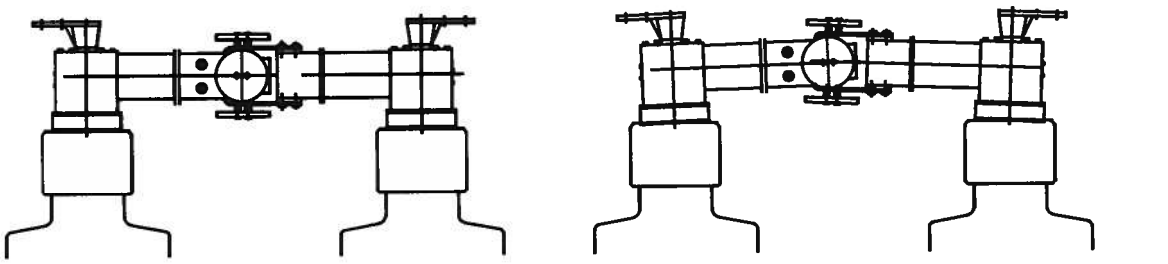

correcto incorrecto (El brazo conductivo no es horizontal)

a) Estado de instalación del brazo conductivo

correcto incorrecto

b) Estado de acoplamiento de dedos y contactos

Figura 15. Unos Estados Correctos e Incorrectos de Instalación

Kawara Trade S.A.

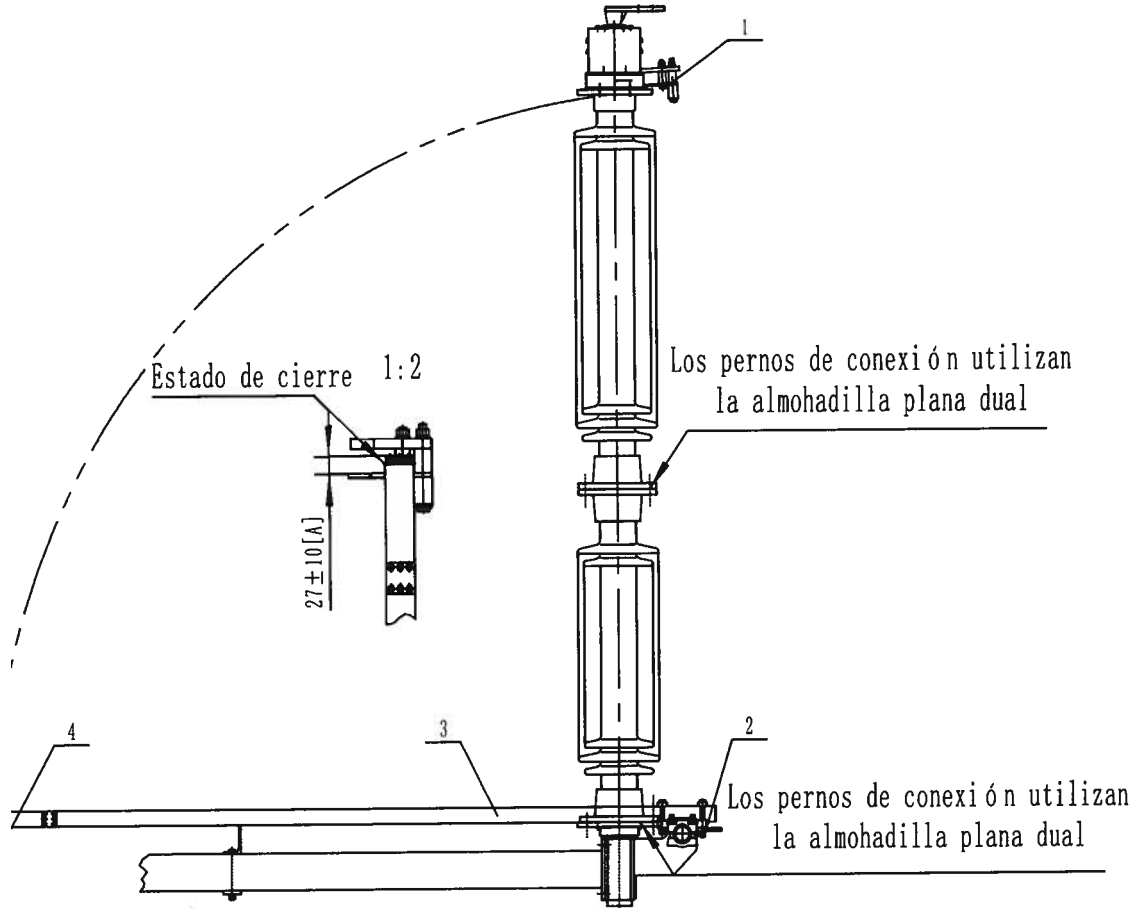

1. Contacto estático 2.Enlace blando 3.varilla conductiva 4.contactor dinámico

Figura 16 Esquema de Estructura de Cuchilla de puesta a tierra y Montaje de Aislador de Porcelana

Kawara Trade S.A.

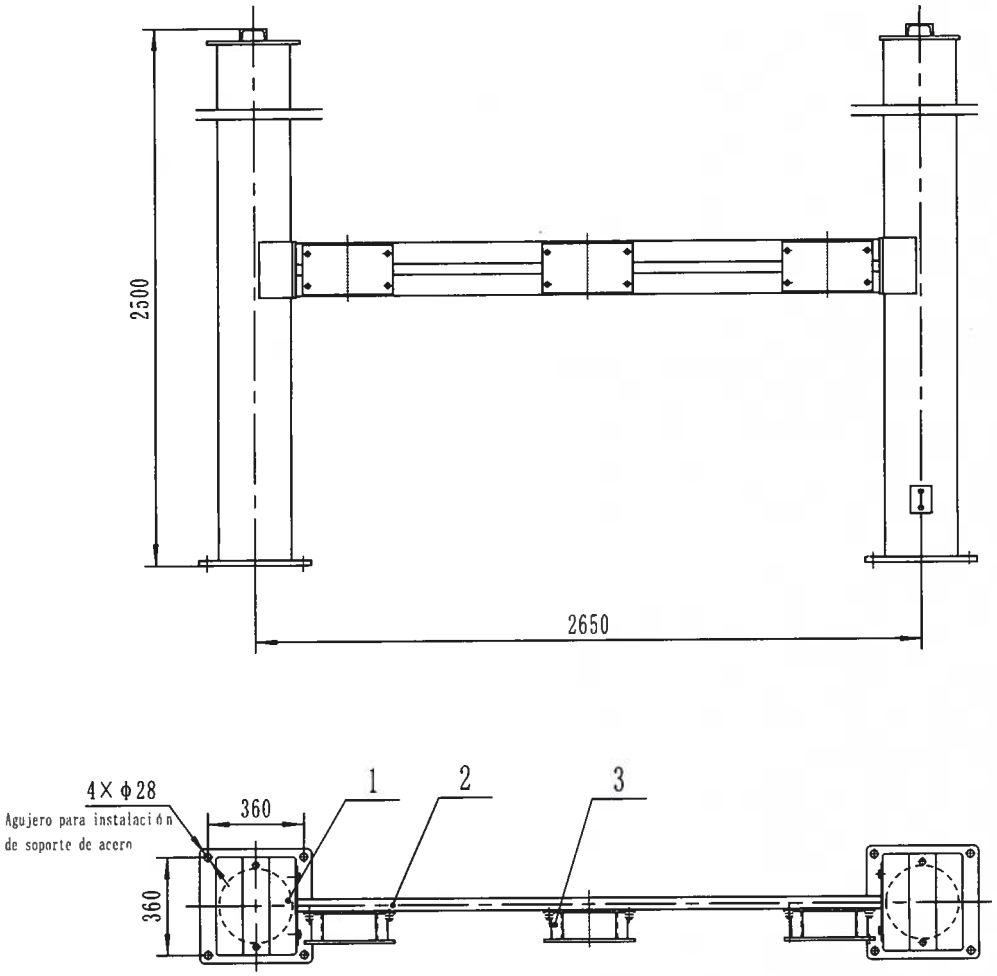

1. soporte (5SR.040.021) 2. Soporte (5SR.040.021) 3. Soporte (5SR.040.021)

Nota 1: se puede equipar la altura de soporte de secuencia 1 mostrada en Figura según los requisitos del usuario, 6 en total, la altura por defecto es 2500mm si no hay otra indicación;
Nota 2: sólo la fase operativa está equipada con el soporte de secuencia 2 mostrado en Figura, 1 en total normalmente, 3 para operación de fase dividida.
Nota 3: la cantidad equipada normalmente de los soportes de secuencia 3 mostrada en Figura es igual a la cantidad del actuador equipado.
Nota 4: esta figura se trata del soporte normal de nuestra empresa (sólo para fines de referencia), la altura de soporte de acero, la altura entre fases y la dimensión de instalación del soporte de acero deben ser prevalecidas por el Instituto de Diseño.

Figura 17 Soporte de Instalación de Fase Operativa con Doble Puesta a Tierra del Seccionador

Kawara Trade S.A.

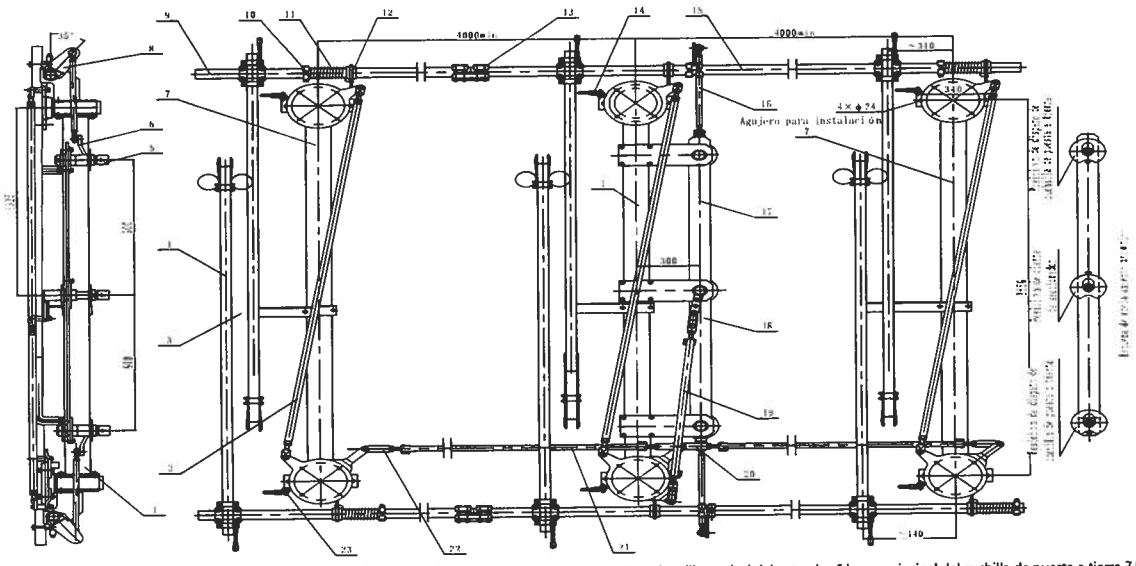

1.base (polo principal) 2.varilla reversa 3.soporte de cuchilla de puesta a tierra 4.varilla conductiva de cuchilla de puesta a tierra 5.varilla vertical del actuador 6.brazo principal del cuchilla de puesta a tierra 7.base (polo lateral) 8.brazo impulsado de cuchilla de puesta a tierra 9.tubo (corto)de conexión de cuchilla de puesta a tierra 10.pieza de posicionamiento de resorte de balance 11.resorte de balance para cuchilla de puesta a tierra 12.junta de tope 13.unión de tubo de conexión de cuchilla de puesta a tierra 14.terminal de puesta a tierra 15.tubo (largo) de conexión de cuchilla de puesta a tierra 16.varilla operativa de cuchilla de puesta a tierra 17.placa de enclavamiento 18.brazo principal de seccionador 19.varilla operativa de seccionador 20.uniones (giro derecho) 21.varilla tripolar de seccionador 22.uniones (giro izquierdo) 23.terminal de puesta a tierra

Figura 18 Esquema de Instalación de Vinculación Tripolar de Seccionador y Cuchilla de puesta a tierra (Posición de Cierre de Seccionador)

Kawara Trade S.A.

INSTRUCTION FOR INSTALLATION AND MAINTENANCE OF TYPE GW4C-252D(G • W) CENTER BREAK OUTDOOR HV DISCONNECTOR

OSR.412.249.188416E

JIANGSU RUGAO HIGH VOLTAGE ELECTRIC APPARATUS CO., LTD

2020. 6

Kawara Trade S.A.

INSTRUCTION FOR INSTALLATION AND MAINTENANCE OF TYPE GW4C-252D(G • W) CENTER BREAK OUTDOOR HV DISCONNECTOR

1. General

1.1 Type and name of the product

G W 4C – 252 (D) (G·W) / J □ - □

- □ — Rated short time withstand currrent,kA
- □ — Rated current, A
- J — Equipped motor operating mechanism
- (G·W) — Highland and antipollution
- (D) — With earthing switch
- 252 — Rated voltage, kV
- 4C — Design No.
- W — Outdoor
- G — DS

1.2 Usage and scope

Type GW4C-252 center break ACHV disconnector is a three-phases a.c., 50Hz, 252kV outdoor high voltage electrical apparatus. It is provided for switching the high voltage transmission line in the power system, or for changing or isolating the bus and the circuit breaker to be repaired for safety maintenance without load.

1.3 The product comply with following standard:

a) GB1985-2014 High-voltage alternating-current disconnectors and earthing Switches

b) GB/T11022 Common specifications for high-voltage switchgear and controlgear Standards

c) DL/T486 High-voltage alternating-current disconnectors and earthing Switches

d) DL/T593 Common specifications for high-voltage switchgear and controlgear Standards

1.4 Service condition

a) Ambient temperature: -50℃～+50℃;

b) Altitude above sea level: not exceed 2000m;

c) Wind speed: no more than 34m/s;

d) Iced thickness: no more than 10mm;

e) Earthquake: intensity no more than 9 degree;

f) No heavy shock frequently, no explosive substance, inflammables or caustic;

g) Dirtiness condition: suitable for pollution region IV class and below;

h)Sun-ray: 1000W/m^2 (It is a fine day at noon)

Kawara Trade S.A.

2. Technical Parameters

Table 1

No.	Designation	Unit	Data
1	Rated voltage	kV	245
2	Rated insulation level [1]		
	a) 1min power frequency withstand voltage（rms）		
	Across the insulating distance	kV	530
	To earth	kV	460
	At mini.distance in the closing of the earthing switch	kV	291
	b)Rated lightning impulse withstand voltage（peak）		
	Across the insulating distance	kV	1200
	To earth	kV	1050
3	Rated frequency	Hz	50
4	Rated current	A	3150
5	Rated short time withstand current (of disconnector and earthing switch)	kA	50
6	Rated peak withstand current(of disconnector and earthing switch)	kA	125
7	Rated continous short circuit time		
	disconnector	s	3
	earthing switch)	s	3
8	Terminal tension:		
	Longitudinal in horizontal	N	1500
	Cross in horizontal	N	1000
	Vertical	N	1250
9	Switching bus changing current capability of the disconnector		
	1）voltage	V	300
	2）current	A	1600
	3）open and close	times	100
10	Switching inductive current capability of the earthing switch		
	1）electromagnetic inductive current（current/voltage）	A/kV	160/15 [2]（80/2）
	2) static inductive current（current /voltage）	A/kV	10/15 [2]（3/12）
	3) open and close	times	10
11	Switching small current capability of the disconnector		
	voltage	kV	$252/\sqrt{3}$
	electromagnetic inductive current	A	1
	static inductive current	A	0.5
	open and close	times	5

Table 1（Continued）

No.	Designation		Unit	Data
				3150A
12	Creepage distance		mm/kV	≥6300、≥7812
13	Mechanical endurance		timess	10000
14	Main circuit resistance		μΩ	90
15	Type of motor operating mechanism			SRCJ2
	Motor voltage		V	AC380/DC220/DC110
	Control circuit voltage		V	AC380/AC220/DC220/DC110
16	Type of manual mechanism			SRCS2
17	Weight of single pole	non-earthing	kg	430
		single earthing	kg	450
		double earthing	kg	470

Remark:

(1)The insulation level should be examed according to the specification of the 2000m altitude above see level. The correct factor is K=1.13 when the disconnector is tested below 1000m altitude;

(2)This data is the value specified in the B class of the standard DL/T486-2000.

(3)No.2: a) 1min power frequency withstand voltage（rms）: Across the insulating distance 275(+85)kV, the value in the bracket is $1.0Ur/\sqrt{3}$;

b) Rated lightning impulse withstand voltage(peak): Across the insulating distance 650(+120) kV, the value in the bracket is $1.0Ur\sqrt{2/3}$

3. Structure and Operating principle

3.1 Structure

3.1.1 The disconnector is designed as two-columns type centre-break horizontal rotating construction. One unit of the disconnector consists of three independent single poles (one main pole and two side poles). Each pole can be furnished with the earthing switch at one side or two sides. The disconnector in three poles is driven by one type SRCJ2 motor operating mechanism for gang operation and the three poles earthing switch is commonly operated by one type SRCS2 manual operating device.

3.1.2 Each single pole of the disconnector is basically made of a base, support porcelain insulators, main live parts, a transmission case and earthing switches (if needed). The base of the disconnector is made that the square-shape steel pipe is connected with the bearing seats at its two ends by the bolts. Both the deep groove ball bearing on the double sides with dust-proof rings and the plane bearing are arranged in the bearing seat. The upper part of the bearing seat uses a seal cushion and the lower part a static sealing construction to prevent the dirt and moist into the cavity of the bearing. Each pole of disconnector is made of two support porcelain insulator columns, of which every column consisting of two solid-column type insulators stacked in series is installed on the bearing seat horizontally.

3.1.3 The main live part is composed of two conducting levers provided with the contact fingers or the contact (as shown in Fig.5). The conducting lever is made of slot-shape aluminum alloy molding. Pairs of the contact fingers are assembled on the contact finger conducting lever. One end of the contact finger is fixedly connected with the conducting lever and the other pressed by stainless steel spring and self-flexible exerts the generated pressure to the contact so that they can reliably be contacted by means of the electric power. The contact on the contact conducting lever is made of copper plate. The conducting levers are furnished with lead-arc contacts which contact earlier while the disconnector closes and separate later while the disconnector opens to avoid the main contacts are burned by the arc. It also ensures the disconnertor has switching bus changing current capability and switching electromagnetic

inductive current, static inductive current capability. The contact part is equipped with a shield for the improvement of the electric field distribution and the reduction of the radio interference level.The outgoing terminal is linked with the conducting lever by the conducting band. The conducting levers are respectively installed on top of the two support insulator columns and rotate 90° with them, obtaining the operation of opening and closing.

3.1.4 The round-bar type fixed contact of the earthing switch is fixed to the conducting lever of the disconnector (Fig.5). The conducting bar of the earthing switch is made of square-shape aluminum tube. The self-elastic contact fingers is fixed at the upper end of the earthing conducting bar. The earthing switch operates in one step: in closing, the moving contact is reliably contacted with the fixed contact depending on the bending of the contact plate. However, the design of the earthing switch in the structure effectively adopts the electrical power to clamp down the stationary contact so that the earthing switch is kept in the closing position. Therefore the earthing switch has the good ability of subjecting to withstand the short circuit current.

3.1.5 The type SRCJ2 motor operating mechanism is composed of a motor, enclosed double worm rod type decelerating box, rotating shaft, auxiliary switch as well as electrical control and protective elements. The enclosure of the mechanism cabinet is made of riveted stainless steel plates. The mechanism is also equipped with a device to prevent the error operation, gaining the mechanical interlock between the manual and electrical operations or the anti-lock that allows neither the electrical operation nor the manual operation. A device for hanging lock is arranged on the door of the mechanism. The outline and installation dimensions of the type SRCJ2 motor operating mechanism are given in Fig.6.The structure and operating principle of the SRCJ2 motor operating mechanism is described in its instruction alone.

3.1.6 The outline and installation dimension of type SRCS2 manual operating device is given in Fig. 7 in which is equipped with the auxiliary switch and the device to prevent the error operation.. The manual operating device is equipped with the electro-magnetic lock which will open hen it receive the single of closing and opening. The device can operate while the electro-magnetic lock is opened by the key.

3.2 Operating principle

3.2.1 As showing in figure, the disconnector in three poles installation in the same horizontal plane can be connecting with rods and controlled with one operating device. The operating device is instaled on the B phase.

3.2.2 The mechanical interlock between the disconnector and the earthing switch is completed through the notch disc on the separate operating shafts and the interlock plate with circle column, make sure that the earthing switch can't be closed when the disconnector is in the closing position or the disconnector can't be closed when the earthing switch is in the closing position.

3.2.3 The manual operating device is equipped with the electro-magnetic lock which will open hen it receive the single of closing and opening. The device can operate while the electro-magnetic lock is opened by the key.

4. Installation and Adjustment

4.1 Inspection before installation

The product is disassembled into groups of packing boxes in order to be convenient for package and transportation. Check the parts and attachments according to the packing list before installing as follows:

a) The ratings indicated on the nameplate should be the same as the ordering list;
b) The external surface of the product and the porcelain insulators should be no damaged and tight points should not be opened;
c) All the fastened parts for the fixings and connections should not be loosened;
d) The operating shaft and the various rotating parts should be operated smoothly without any blocking;
e) The operating mechanism is operated easily and correctly to the opening and closing positions. The stroke switch and the auxiliary switch can be changed correctly.

4.2 Installation and Adjustment of the disconnector

The disconnector is only suitable for horizontal installation according to Figs 9-12. The overhead or suspension

arrangements of the various parts are shown in Fig.13.

4.2.1 Installation of the Base

The base of each single pole of the disconnector is fixed to the installation foundation on the same level. (M20×60 bolt prepared by the user.) When the earthing switch is furnished, make ensure that the rotating shafts of three poles of the earthing switch are alignment. Then check that the flange surfaces of the bearing seats at the two ends of the base of the disconnector should be level. If necessary, loosen the installing bolts to shim with the special C-washers until the flange surfaces are horizontal in the two orthogonal directions.

4.2.2 Installation of the porcelain insulator

The upper porcelain insulator is connected with the lower porcelain insulator into a complete porcelain insulator column by the M16×65 bolt (including pads, washers and nuts). Then the upper and lower porcelain insulators are fixed to the flange of bearing seat respectively by the M16×65 bolt (including pads, washers and nuts). After, check the upper flange of the insulator should be horizontal in the two directions. If needed, loosen the M16×65 bolt and shim with the special C-washers on the bolts. (See Fig. 14.) Make sure that the measured center distance between the two insulators per pole should be （2650±3）mm.

4.2.3 Installation of the conducting lever

Carefully lift up the conducting lever and fix it to the Carefully lift up the conducting lever and fix it to the porcelain insulator by the M16×65 bolt (including pads, washers and nuts). When installing, make sure that the conducting lever, high or low, should be the same level in the closed position. Fig. 14 shows several correct or incorrect installation situations.

4.3 Adjustment of the operating pole disconnector

4.3.1 The motor operating mechanism is fixed below the operating pole disconnector according to the installation dimensions on the drawing. While the disconnector is set in the closed position and so is the operating mechanism, the vertical connecting rod of the mechanism is tightened by the joint. (The length of this rod above the mechanism remains a certain tolerance in factory assembly for delivery to meet the demands of various installation heights for the customers. The length of the vertical connecting rod which is taken is the dimension between the point A and the connecting center of shaft pin above the mechanism indicated in the diagram of the mechanism. The disconnector is opened and closed by the manual hand. The corner between the conducting lever and the axial of the base should be guaranteed in the range of 90° after the disconnector is opened. When closing, the contact and contact fingers are located in normal contacted position.

4.3.2 The center distance of the operating crank arm of the main switch is adjustable, The center distance after alignment marked on the crank arm is 155mm. If the switching-in or switching-out angle of the main switch in the B pole (operating phase) is less than 90°, the center distance of the crank arm can be raised; on the contrary, the center distance shall be reduced, as shown in the details A of the attached Figures 1.

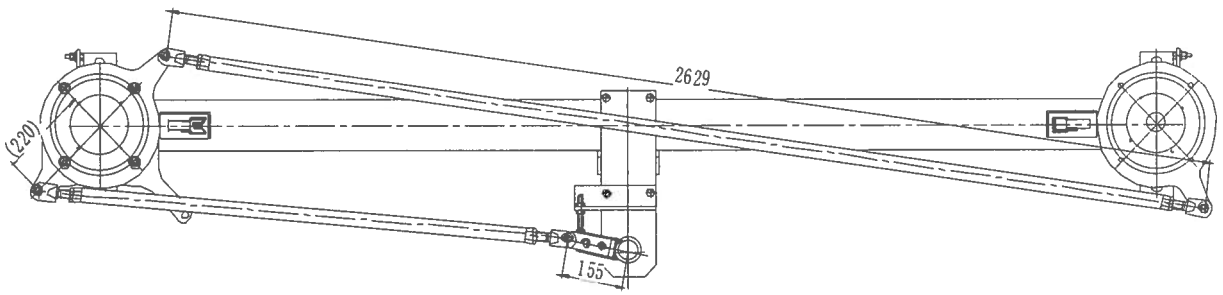

Fig.1 the diagram of the base of the one pole

This moment open the disconnector ，inspect Contact、Fingertips location of stoma if meet the requirements（see fig.2a），when the situation，can be separately adjusted by the rod what between the ceramic columns (see Fig 9)inorder to achieve the effects as Fig.2a。Specific methods as：Fig.2b，can achieve center distance by regulate railings；If the state as Fig.2c，achieved by the opposite approach.

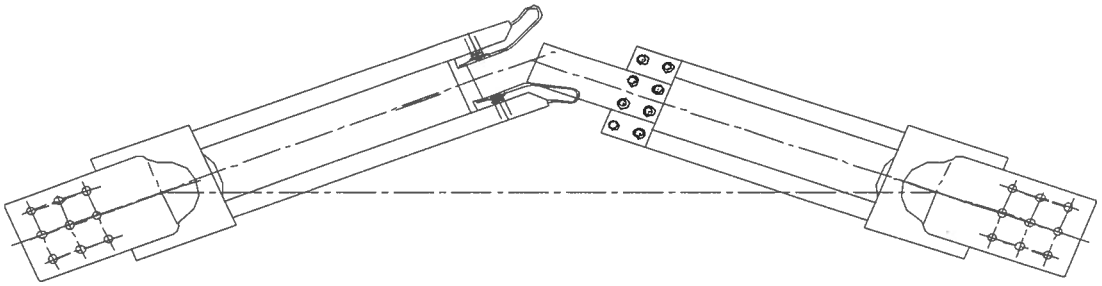

a） correct

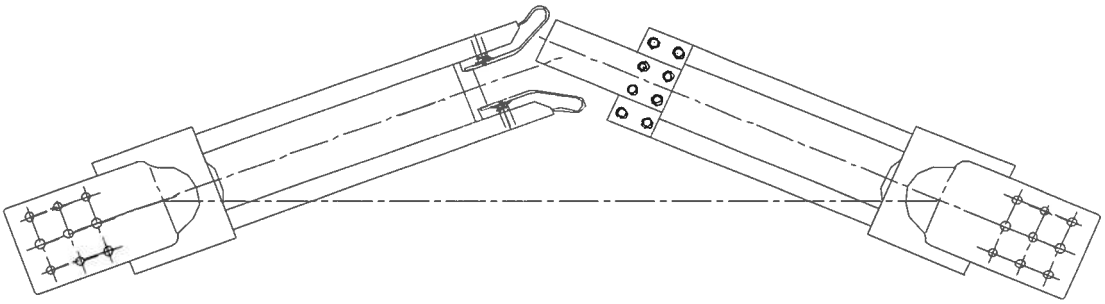

b) error

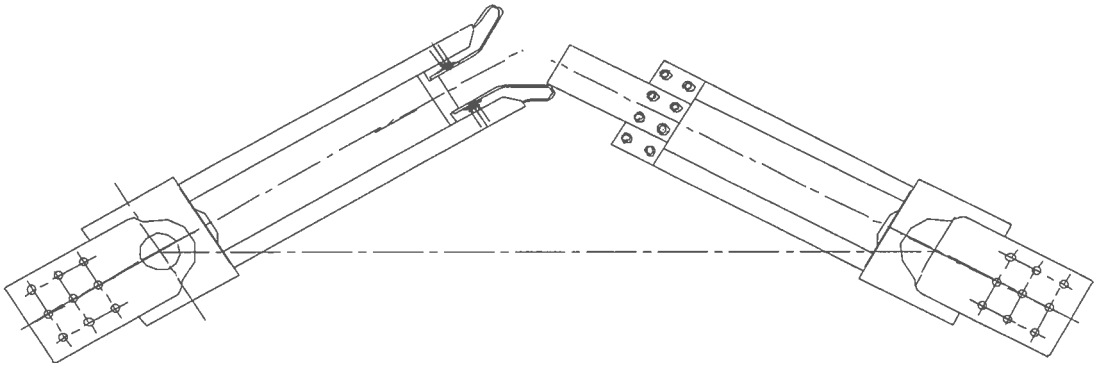

c)error

Fig.2 Contact、Fingertips location of stoma

After adjustment, Let disconnector had a complete sub-closing operation, closing position, left and right arms in straight line conductive as （Fig.3）。Check, if the tripping angle of the contact conducting than 90 degrees, can achieve center distance by regulate railings; If greater than 90 degrees, can achieve center distance by regulate railings as

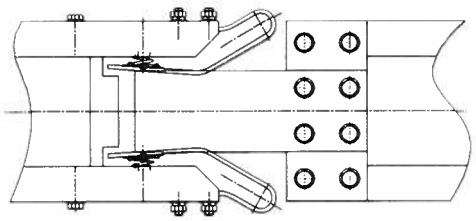

a)correct

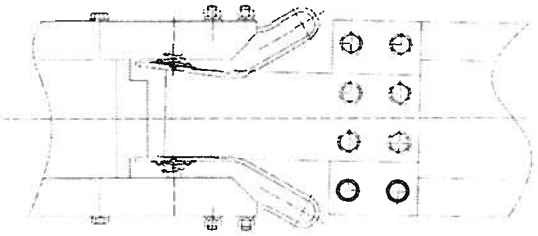

b)error

Fig.3

Closing, guarantee contact and contact Zama gap of 20 ± 10 mm, closing time shall ensure that each contact and finger tips on the contact, the contact surface contact line of not less than 2/3 (tested with 0.05 Feller gauge), contact and finger exposure, as shown in Figure 4.

Kawara Trade S.A.

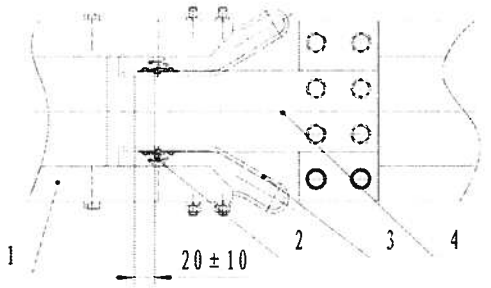

1.the conducting levers 2.spring 3.the contact fingers 4.the contact terminal

Fig.4

4.3.3 A, C, two poles of the three-phase linkage levers centre distance is also designed to be adaptable, namely controls various poles off angle. When you release the adjustment levers bolts on close to 90 °, the angle is smaller than the decreases levers centre distance, but increasing centre distance. Specific adjust position as in Fig.1.

4.3.4 If there is earthing switch, install the manual operating device under the operating pole disconnector, and install the vertical pole as the disconnector.

4.4 Installation and Adjustment of the three poles gang operation

4.4.1 Adjustment of the disconnector for three poles gang operation (as shown in Fig.18)

The adjustment of the three poles gang operation may be carried out after the adjustment of the operating pole of the disconnector is finished.

The adjustments should be done according to the following sequence:

First, the single pole disconnector is set to the closed state, second the main pole is connected with the side poles by means of the interpole tie rod. Then the disconnector is opened and closed by the manual hand. In this case, the three poles should simultaneously reach to the opening and closing position and also the moving contact is contacted with the stationary contact very well. At this time the closing synchronization of the three poles disconnector should be ≤20mm. If not, adjust the interpole tie rod, then carries out the closing and opening operation with the manual, recheck the position of the opening and closing, the contacted conditions of the contacts and the closing synchronization of the three poles. (The measuring method is: that the distance between the contact and the contact finger of the another two poles is measured as any pole of the contact is contacted with the contact finger.)

4.4.2 Installation and adjustment of the earthing switch for the three poles gang operation (Fig.18)

Release the stopper on the frame of the earthing switch to install its three poles connecting pipes to the disconnector. When installing, the driving arm, the conducting tube, retainer, balance spring and locating part in the earthing switch are respectively sleeved to the connecting pipes and then the two pipes are linked by the coupler. In order to reduce the operating torque and improve the correspondence in the closing operation to ensure the smooth and easy opening and closing operations, the balance springs are arranged on the two side poles as shown in Figs 10, 11 and 12. When installing the balance spring should be remained to a certain pre-deformation amount.

When the earthing switch is set to the opening position and so is the operating mechanism, the driving arm of the earthing switch is connected according to the angle 35°given in Fig.18. The earthing switch is opened and closed manually as the disconnector is located in the opening position. When the earthing switch is in the closed state, the stationary contact should be confirmed to explode 10～15mm below the moving contact.(See Fig.16) If the earthing switch can not be closed to the position, the corner of the driving arm to the horizontal direction can be adjusted which is slightly less than 35°. If necessary, the bolts on the driving arm can be loosened to adjust the central distance of the arm to obtain the accurate opening and closing position. If the operating force is too big, the balance spring can properly be adjusted. If the moving contact is meshed with the stationary contact together in closing, not separated, not separate, shim with the special C-washers on the bolts.

During the operations of the disconnector and the earthing switch, attention should be paid to the working conditions of the mechanical interlocking because any mistake operation can damage the interlocking element or the

operating mechanism.

When the disconnector is in opening position, the earthing switch for three poles gang operation can manually be opened and closed. To reach the synchronous or consistent in the opening and closing operations of the three poles earthing switch, the adequate adjustment should be done. Finally, the flexible conductors on the earthing switch are fixed to the ground terminal on the base of the disconnector.

4.5 Inspection and reception after installation and adjustment

4.5.1 The following dimensions should be measured respectively after the adjustment of the disconnector has been finished:

a) The air insulation distance of the disconnector to earth doesn't less than 2.1 m;

b) After the disconnector is opened, the air insulation distance of the break of the disconnector doesn't less than 2.2m;

c) After the disconnector is opened, the air insulation distance between poles all doesn't less than 2.2m;

d) The distance between poles is not less than 4m.

4.5.2 As they are operated by the manual 3 to 5 times respectively, the operation of the disconnector and the earthing switch should be stable in operation, correct in the opening and closing position and good to the contacting of the contact.

Attention: As the disconnector is operated, the earthing switch lies in opened state; As the earthing switch is operated, the dosconnector lies in opened state.

4.5.3 The disconnecor operates 5 times at rated operating voltage of the motor and 3 times at rated operating voltage of 85% and 110% respectively without any abnormal phenomenon. Their opening and closing position are all right and the contacting of the contact is good. The simultaneous in three poles is not more than 20mm. The contacts of the auxiliary switch in the operating mechanism is switched in accordance with the requirements, the mechanical interlock is reliable in operation.

Attention: Before energizing, the operating mechanism should be set in the middle position of the opening and closing. Then the power source turns on. The press button of the opening or closing is pressed down. Observe if the main shaft of the mechanism or the rotating direction of the disconnector are correct. If the direction is reversal, immediately press the stop button, cut off the power source, alter any two incoming conductors of the motor power source to change the phase order.

4.5.4 When closing, the moving contact of the disconnector should be contacted with the stationary contact well. And at the same time it is recommended that the direct current drop voltage measure is taken to measure the resistance of the main circuit (The recommended current is 100A.) The circuit resistance between the two terminals of the disconnector doesn't exceed the requirements in No.14 of table 1.

4.5.5 Check if all the transmission part and rotating positions are lubrication and if all the bolts are tightened.

4.5.6 The contact and the contact finger of the disconnector and the moving and fixed contacts of the earthing are coated with a thin layer of neutral Vaseline for protection.

5. Maintenance and repair

The disconnector doesn't require special maintenance. However, we recommend carrying out the routine checks and maintenance in order to ensure the equipment run normally, especially on the parts which are most sensitive or wear easily.

5.1 To guarantee the parameters effectively, the routine checks and maintenance of the disconnector must refer to table.2 in this instruction. The judgment and treatment of the common break can refer to table.3.

5.2 Remove isolating switch and replace main parts

5.2.1 Remove isolating switch

Warning! Prior to the performance of any following operation, please confirm:

a) Isolating switch is in the switching-off state;

b) All high voltage in-coming lines and out-going lines have been confirmed grounded by visual inspection;

c) Operating mechanism has been disconnected with all low voltage conductors.

5.2.1.1 Disconnect

a) Disconnect the high voltage conductors on the terminal block;

b) Disconnect the low voltage conductors in the operating mechanism.

5.2.1.2 Disassemble

Disassemble with the same tools as install the isolating switch in the following sequence:

a) Disassemble the conductive arm;

b) Disassemble the grounding switch;

c) Disassemble the insulators;

d) Disassemble the fixed base;

d) Place the disassembled nuts and bolts by classification.

After the disassembly is completed, all parts shall be placed by classification.

5.2.2 Disassemble the equipment and replace main parts

when the live parts are replaced, the permanent fixed interfaces (such as the contact surface between the terminal board and the static contact bracket) shall be treated with the following methods:

a) The trichloroethene or chloroethylene is utilized to carefully remove any oily or greasy trace on the above-mentioned surface, and the stainless steel wire brush or fine sand paper is applied to eliminate the oxides thereon;

b) Conductive grease is smeared over such surfaces;

c) Two surfaces shall be joined as soon as possible.

Table 2 Preventive maintenance

Switch state	Work to be performed in accordance with the relevant installation requirements	Pre-control methods
A-Switch maintains operation	Simple inspection	During the site inspection or once each two years
	A1) Mechanical parts for the equipment are not damaged; A2) Contact part of the contact and stylus shows the color and luster of silver coating, and the circuit resistance does not exceed the specified value as shown in Table 1; A3) The casing of low voltage cables and grounding cables are not damaged; A4) The insulators are not damaged, and the surface is without any deposited dirt; A5) The operating mechanism is not damaged; A6) The thermometer is utilized to inspect the heating state of the mechanism heater.	
B-Switch exits from operation	Examine and repair the switch	Once each 5 years or each 4,000 times in operation

Table 2（Continued）

	B1) Perform inspection of 1-2-3 item in the part A; B2) Check all live parts; B3) Measure resistance of main conductive circuit; B4) Check fastening degree of bolts; B5) Check local operation; B6) Check manual operation; B7) Check coupling situation of main contact; B8) Check situation of contact surface; B9) Check all mechanical and electrical parts, and whether cables and grounding connection are damaged or not; B10) Check lubricating situation of gears in operating mechanism; B11) Check operation of the following electrical parts: Anti-condensation (if any) and heating resistance Electrical interlock	
C-Switch exits from operation	Big repair	Once each 10 years or each 10,000 times in operation
	C1) Perform comprehensive inspection of various items in the part B; C2) Check state and abrasion of main parts, insulator situation and mechanical adjustment thereof during the installation. Any deviation detected shall be remedied. If the replacement is required, it shall follow the procedure as stated in the installation manual. If any doubt with respect to the restoration, please feel free to contact with our company.	

Preventive Maintenance Plan Ensuring 5,000 Times Operation of Isolating Switch

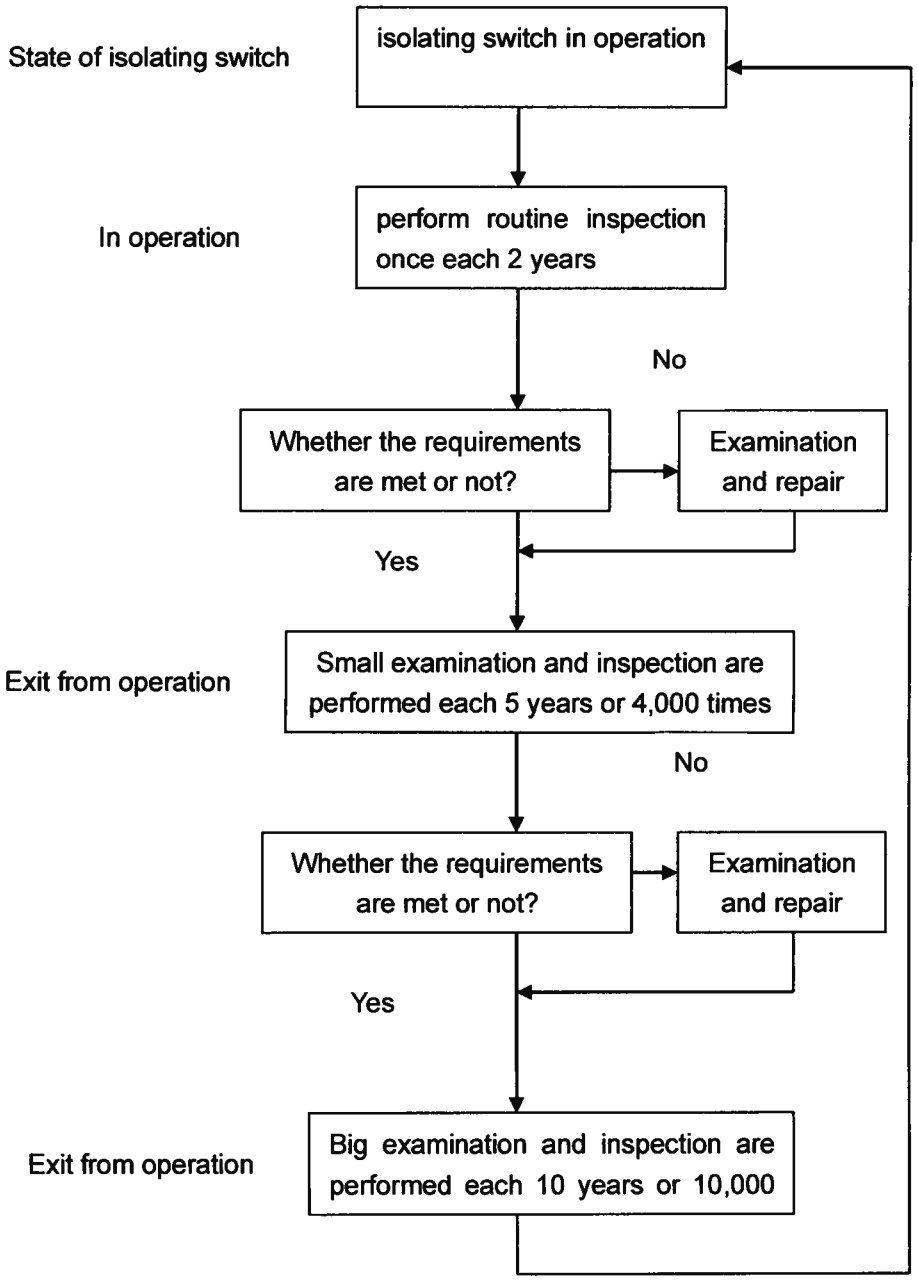

Kawara Trade S.A.

Table 3 Judgment and Treatment of Faults

Fault type		Possible causes	Judgment standard and inspection method	Treatment
Drive part on the base	Main switch is not closed and opened completely	Connecting drive rod between phases is deformed, or the joint is loosed;	Perform visual inspection on connecting drive rod and joint	Find out causes, and remove relevant defects therein
	Main switch is not closed and opened completely	Clamps are loosened or skid	Fasten clamps with torque wrench	Re-adjust the switching-in position of grounding switch, and fasten the clamps
	Mechanism rotates, but product fails	The clamping bolts fail to be fastened in according with the moment requirements, or fastening bolts are not applied	Fasten clamps with torque wrench	Inspect
	Moment of manual operation is raised	The rotating part of the drive system suffers lubricant dryness, excessive sludge or rust in shaft pin, causing increase in the drive resistance	The resistance is increased in operation.	Clean and lubricate drive parts
Upper conductive part	Oxidization of contact position	The contact is in unfavorable contact, generating heat.	Perform visual inspection on the contact position, to check whether any cauterization or infrared temperature measurement occurs or not	Clean off surface dirt, and replace it in the case of cauterization
	The vulcanization of the contact fingers or the contact.	The sulfur oxide had high lead levels in airborne, Which causes the sulfuration of silver coating and the increase in resistance.	The silver surface of the contact fingers and the contact turned black.	Cleaning it with the scouring pad and vaseline until the silver surface shows bright luster; If the sulfur oxide had high lead levels in airborne in the locality,it needs to check up the situation of the contact fingers or the contact at regular intervals, also needs to clean and maintain.

Kawara Trade S.A.

Fault type		Possible causes	Judgment standard and inspection method	Treatment
Others	Remote control fails	Remote/local switch is in the wrong place	Check the signal, to see whether there is control signal or breakage signal or not	Switch it to the remote one
	Both remote control and close control fail to work	The elements in the switching-in and switching-out circuit are damaged	Measure the switching-in and switching-out circuit in the electric mechanism	Find out faulty elements, and replace them
		Wires are loosened	Measure the switching-in and switching-out circuit in the electric mechanism	Find out loosened wires, and re-connect them

Table 3（Continued）

Others	The motor mechanism is not operated.	The power source is not enough.	The motor sounds the "buzz" but not run.	Solve the problem of the insufficient power.
		The motor is damaged.	The power source is OK but the motor does not turn..	Replace the motor.
		The stroke switch is broken.	Check the line with the universal gauge.	Replace the stroke switch.
	The changeover switch is changed to the manual position to lock the baffle not to be drawn out.	The lock relay is broken.	The changeover switch is turned to the manual position but the relay doesn't work.	Replace the relay.
	Vary the output angle of the motor mechanism	The mechanical locating is damaged.	Visually inspect by hand shaking	Replace the locating part.
		The stroke switch is broken or off earlier	Visually inspect by hand shaking	Replace the stroke switch or adjust the changing time.

Kawara Trade S.A.

6 Tools and instruments

The disconnector should fully be provided to the normal tools for installation and maintenance such as split wrench, pipe wrench, torque wrench up to 400N.m and instruments such as thread knife, pincers, harmer, level instrument, scale and so on.To lift the heaviest unit of the product, a lifting truck should be supplied with enough lifting ropes and lifting rings.

7 Acceptance and storage

7.1 Upon the receipt of the product, the user shall carry out the acceptance according to acceptance items within 15 days, and the acceptance items are as follows:

Upon the receipt of the crates, the user shall immediately check the articles included in each packaging box, to confirm no damage to or loss of these articles.

If any damage occurs to these said articles, or any discrepancy exists between actual articles and those as stated in the packing box, the user is required to immediately inform our company thereof.

If the articles shall be transferred or long stored after being inspected, the packing boxes shall be restored to the original state.

When the packing boxes are loaded, unloaded and lifted, the equipment therein shall not be damaged.

7.2 Storage

7.2.1 Short-time storage (within 3 months)

The packing boxes shall be placed in the dry, concealed site. If such boxes are put outdoors, favorable drainage shall be provided.

If such boxes are stored outdoors, better sunshine shall be guaranteed. These said crates shall be underlain with the batten at least 15cm from the ground.

If such crates are stored for not more than 3 months, the anti-condensation heater within the operating mechanism may not be connected to the power supply.

7.2.2 Long-time storage (over 3 months)

In such case:

If the equipment is stored indoors, and the warehouse is dry, the operating mechanism shall be checked once each 6 months, to ensure no damp inside.

If the equipment is stored outdoors or in the damp warehouse, the recommended scheme in Article 9.2.1 shall be consulted, and the anti-condensation heater within the operating mechanism shall be continuously connected to the power supply.

8. Documents, spare parts and attachments supplied with the product

8.1 The documents are generally included:

a) Certificate of the product;

b) Test report in factory delivery;

c) Instruction for installation and maintenance of the product;

d) Packing list.

8.2 Name and quantity of the attachments and spare parts with the product

These attachments and spare parts are given in the packing list.

9. Order information

9.1 Please write down clearly in ordering: type of the product, rated voltage, rated current, rated short time withstand current, insulator creepage distance, earthing-form (non-earthing, single-earthing or double-earthing) and quantity etc.

9.2 The technical agreement signed between two parties should indicate that the disconnector in this product has the ability of interrupting and continuously charging bubar current and the earthing switch has the ability of switching inductive current.

9.3 Type of motor mechanism or manual device, and motor voltage, control voltage and number of the auxiliary contacts etc.

9.4 The structure of steel frame is show in figure 17 if a client needs steel frame.

10. Moment force of common steel threadere connection, see Table4 (just for reference)

Table4 Tightening torque of the bolts and screws(intensity 4.8, just for reference)

Thread	Torque（N.m）/Stainless steel bolts、Hot-galvanized bolts
M6	8
M8	18
M10	37
M12	63
M16	157
M20	286
M22	391
M24	508
M36	1596

Table 5 GW4 C -252 (G • W) Outdoor High Voltage AC Isolating Switch Form of Conformity Spot Inspection in Site Adjustment by Service Personnel

Project name: _____

Service personnel: _____ **Service date:** _____

No.	Items	Specifications	Check results	
			OK (√)	Bad (×)
1	The product appearance	There is no obvious impact and damage phenomenon on the surface.		
2	The spare parts and documents	These spare parts and documents should be full and complete.		
3	The bolts and the split pins connected to the conducting part and the base	The bolts are not loosened and lost. The split pins have no break or crack phenomenon.		
4	Conduct blade	Comparison of the sign on both left and right side conduct blade to confirm the direction of lifting of the conduct blades is right		
5		The bolts of the conduct blades are not loosened		
6		Confirm the bolts to fix conduct blades and insulators are not loosened		
7	The contacting conditions of the main contacts	In closed state, the gap between the bar of the main contact and the contact blade should be(20±10)mm, and it should be checked again after the busbar connected.		
8		When closing, the compressions of the left and right contact fingers		

Kawara Trade S.A.

No.	Items	Specifications	Check results	
			OK (√)	Bad (X)
		should be met with the requirements.		
9		There should be no clamping stagnation over the opening and closing.		
10		The contact between contact blade and contact finger should be dependable and without gap, and the contact resistance should be under 8 μ Ω.		
11		After opening, the main contact and contact fingers should reset themselves.		
12	Support column insulator and operating insulators	The upper flange of the insulator is reliably tightened with the live part, its lower flange is reliably tightened with the base and the upper and lower insulators are connected reliably.		
13	The transmission part of the base	The supported suspension bolts on the base is connected tightly with the installation surface of the support column.		
14		The stainless steel transmission pin on the operating insulator should be reliably connected, not loosened.		
15		In closed station, the main crankarm of the base should over the dead spot.		
16		The tightening bolts on the pull rod joint should be tightened and the adjustable nuts at two ends of the interpole tie rod should be tightened too.		
17	The earthing blade part	The pressure in the stationary contact contacting with the moving contact of the earthing blade should be appropriate, easy to be opened.		
18		In opening, the earthing blade should be basically horizontal.		
19		Tighten the tightening bolts on the tie rod joint of the earthing blade, not loosened. The adjustable nuts at two ends of the interpole tie rod should be tightened. The adjustable tightening bolts on the arm should be tightened reliably.		
20		The balance spring should be adjusted in the closed position so that ensure it can not occur the reverse force.		
21		The conducting tube of the earthing blade is reliably clamped on with the rotating shaft of the earthing switch without sliding.		
22	Mechanical interlocking	Interlock reliably. The sliding plate in the interlocking should be moved smoothly without any blocking.		
23	Operating mechanism	The opening and closing positions of the mechanism is accurate and right.		
24		The mechanism and the clips of the operating pipe are clamped down reliably without any sliding phenomenon.		
25		In opening and closing, the signal send from the auxiliary switch should be right.		
26		The opening and closing position of the manual mechanism can be blocked by the mechanical locating pin.		

Kawara Trade S.A.

No.	Items	Specifications	Check results	
			OK (√)	Bad (×)
27	Simultaneous	The simultaneous of the main earthing blade is all ≤20mm.		
28	Main circuit resistance	The 1250A～1600A main circuit resistance is≤180μΩ.		
		The 2000A～2500A main circuit resistance is≤130μΩ.		
		The 3150A main circuit resistance is≤90μΩ.		
		The 4000A main circuit resistance is≤80μΩ.		

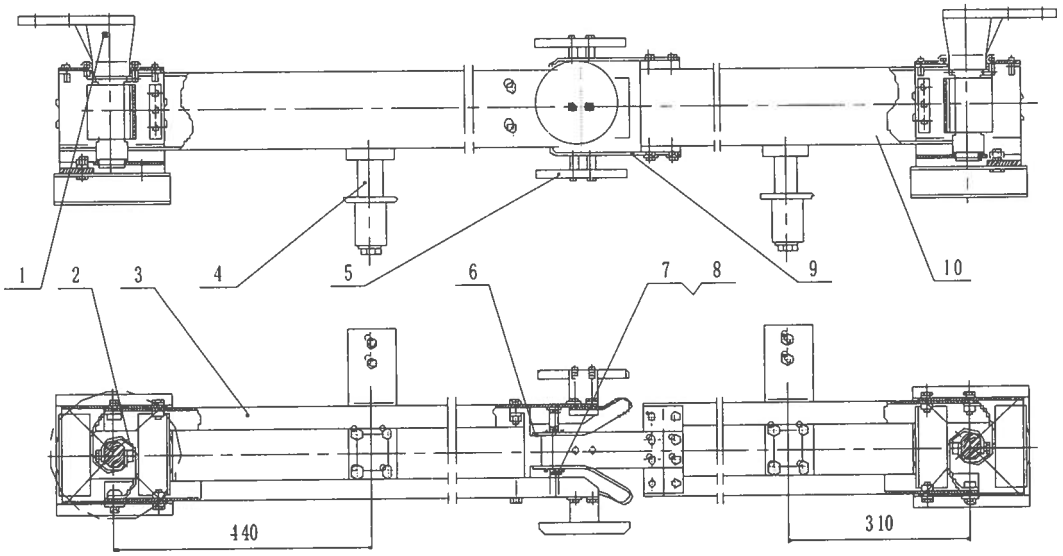

1. Terminal 2. Conductive belt 3. conductive arm in touch finger side 4. Grounding static contact 5. Shielded enclosure 6. touch finger 7. spring 8. Insulation septa 9. contact 10. Conductive arm in contact side

Fig.5 Conductive parts structure of disconnector

Kawara Trade S.A.

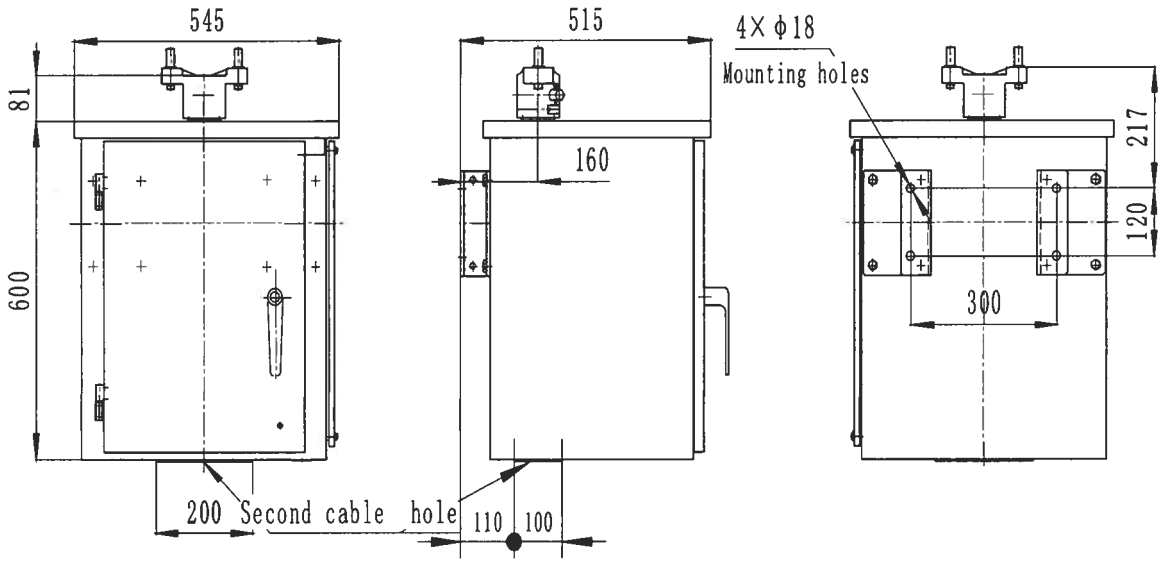

Fig.6 The type of SRCJ2 motor operating mechanism outline and installation dimension drawing

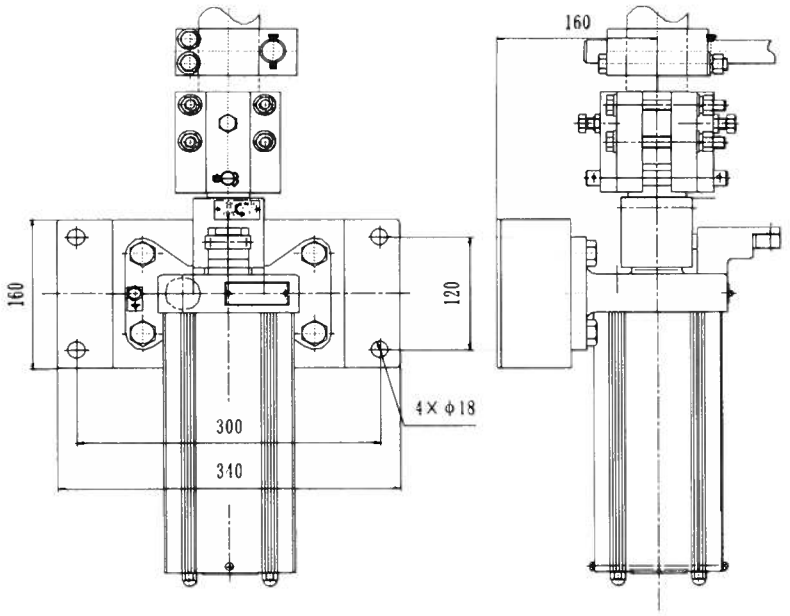

Fig.7 SRCS2 manual actuator outline and installation dimension drawing

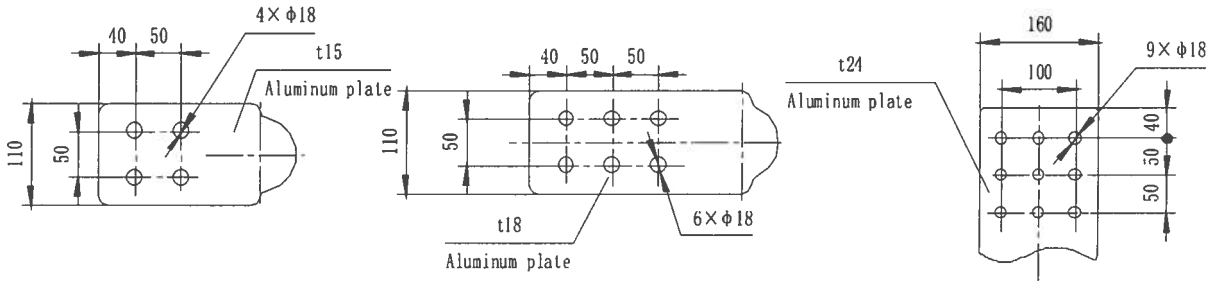

1250A～2000A 2500A 3150A～4000A

Fig.8 products normal configuration once terminals

Kawara Trade S.A.

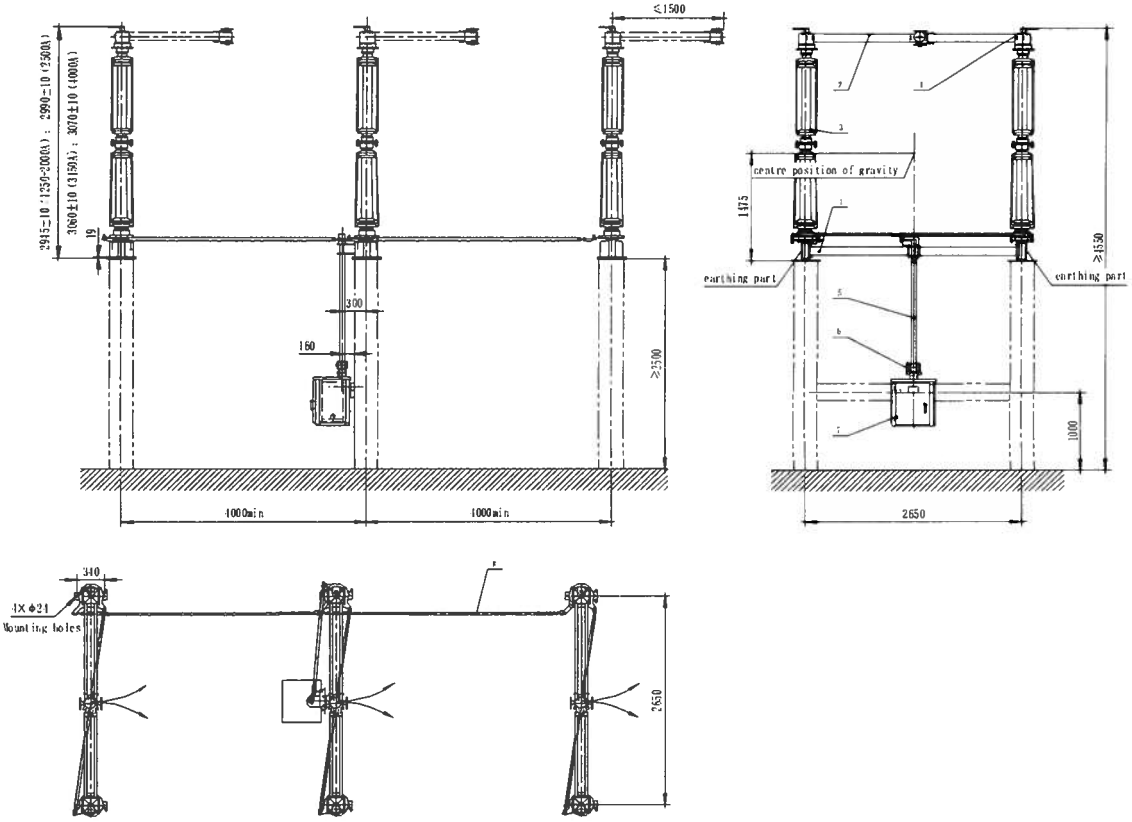

1. Conductive arm in contact side 2. Contact finger side conductive arm 3. Insulator 4. base 5. Vertical shaft 6. joint 7. motor operating mechanism 8 Three-phase linkage pole of disconnector

Fig.9 GW4C - 252 (W) type of outdoor high-voltage AC disconnector three extremely pro-cyclical arrangement (not earthing)

Kawara Trade S.A.

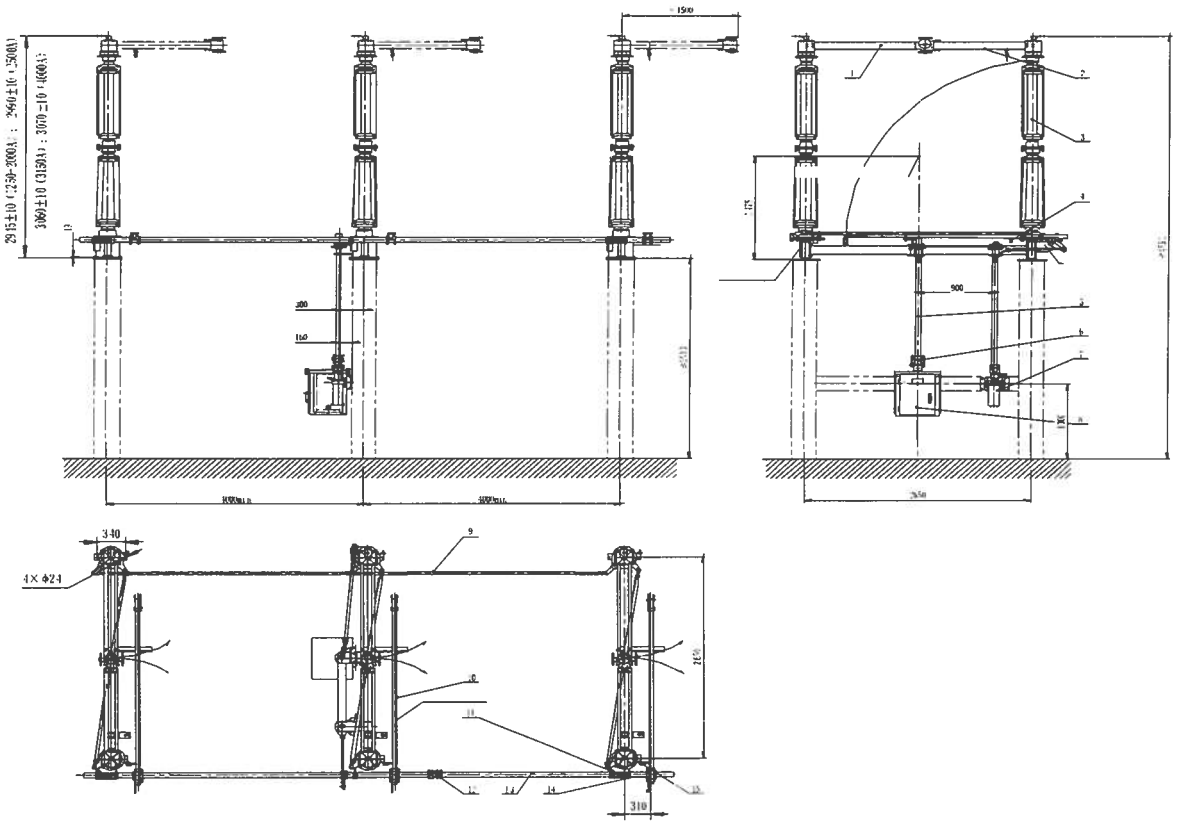

1. Contact finger side conductive arm 2. Conductive arm in contact side 3. Insulator 4. base 5. Vertical shaft 6. joint (motor operating mechanism) 7. manual actuator 8. motor operating mechanism9. Three-phase linkage pole of disconnector 10.earthing switch conduct pole 11. earthing switch balance spring 12. earthing switch connecting pipe 13. earthing switch connecting pipe connectors 14. Balance spring positioning piece 15.grounding terminal

Fig.10 GW4C - 252D (W) type of outdoor high-voltage AC disconnector three extremely pro-cyclical arrangement (right earthing)

Kawara Trade S.A.

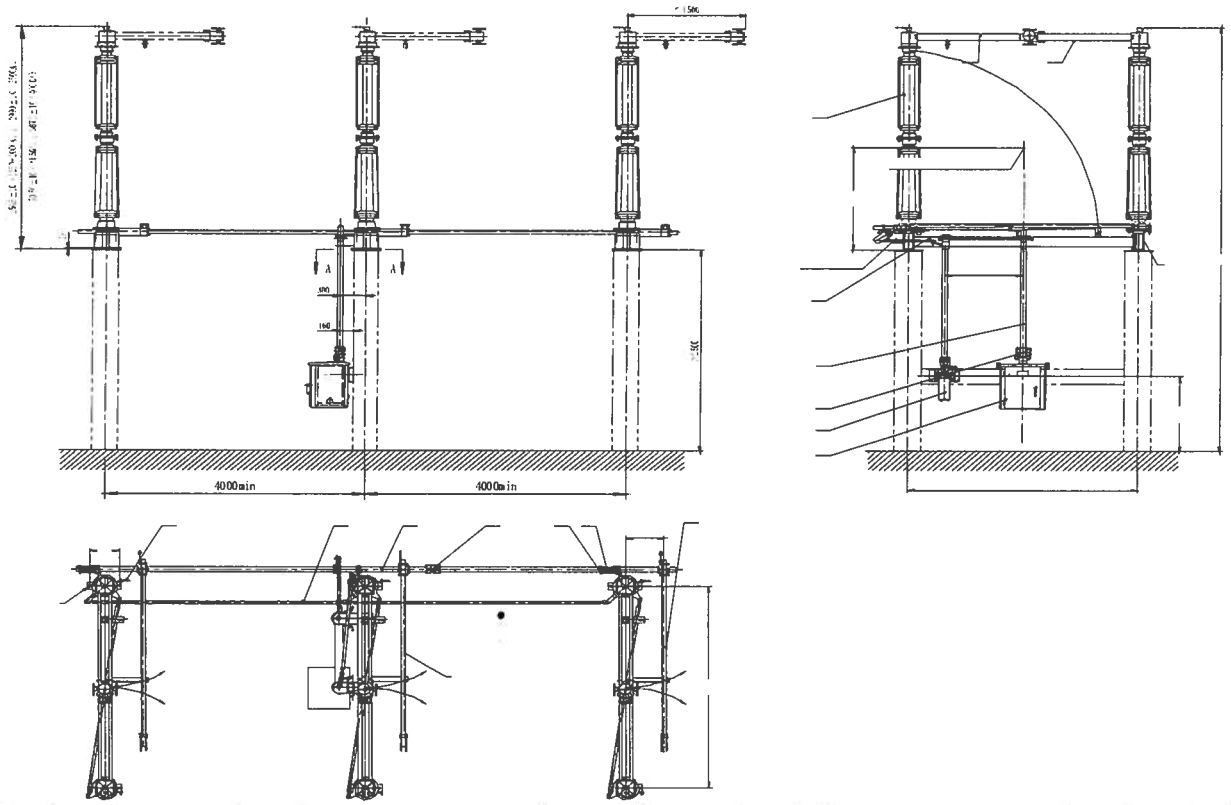

1. Conductive arm in contact side 2. Contact finger side conductive arm 3. Insulator 4. base 5. Vertical shaft 6. joint motor operating mechanism 7. manual actuator 8. motor operating mechanism9. earthing switch conduct pole 10. earthing switch balance spring 11. Balance spring positioning piece 12. earthing switch connecting pipe connectors 13. earthing switch connecting pipe 14. Three-phase linkage pole of disconnector 15 grounding terminal

Fig.11 GW4C - 252D (W) type of outdoor high-voltage AC disconnector three extremely pro-cyclical arrangement (left earthing)

Kawara Trade S.A.

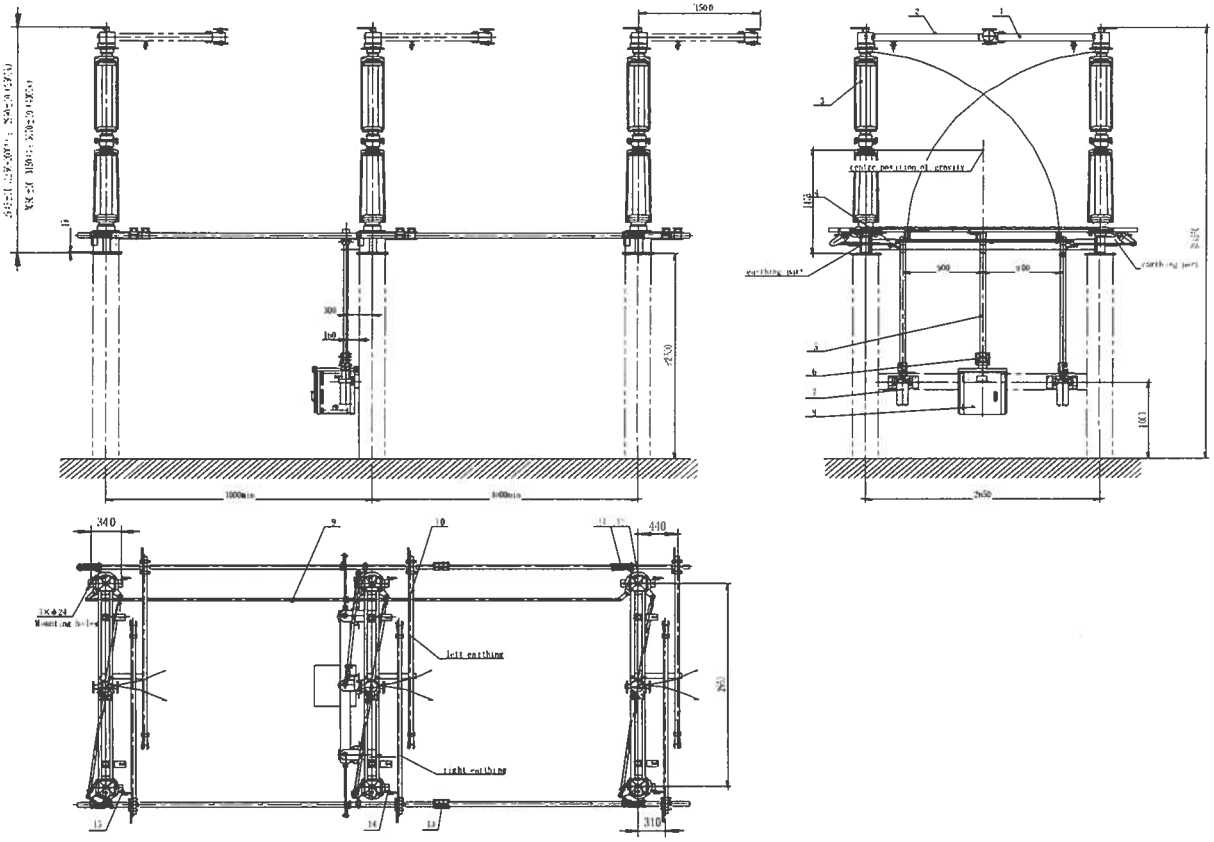

1. Conductive arm in contact side 2. Contact finger side conductive arm 3. Insulator 4. base 5. Vertical shaft 6. joint 7. motor operating mechanism 7. manual actuator 8. motor operating mechanism9. Three-phase linkage pole of disconnector 10. earthing switch conduct pole 11. earthing switch balance spring 12. earthing switch connecting pipe 13. earthing switch connecting pipe connectors 14. Balance spring positioning piece 15. grounding terminal

Fig.12 GW4C - 252D (W) type of outdoor high-voltage AC disconnector switch three extremely pro-cyclical arrangement (double earthing)

Kawara Trade S.A.

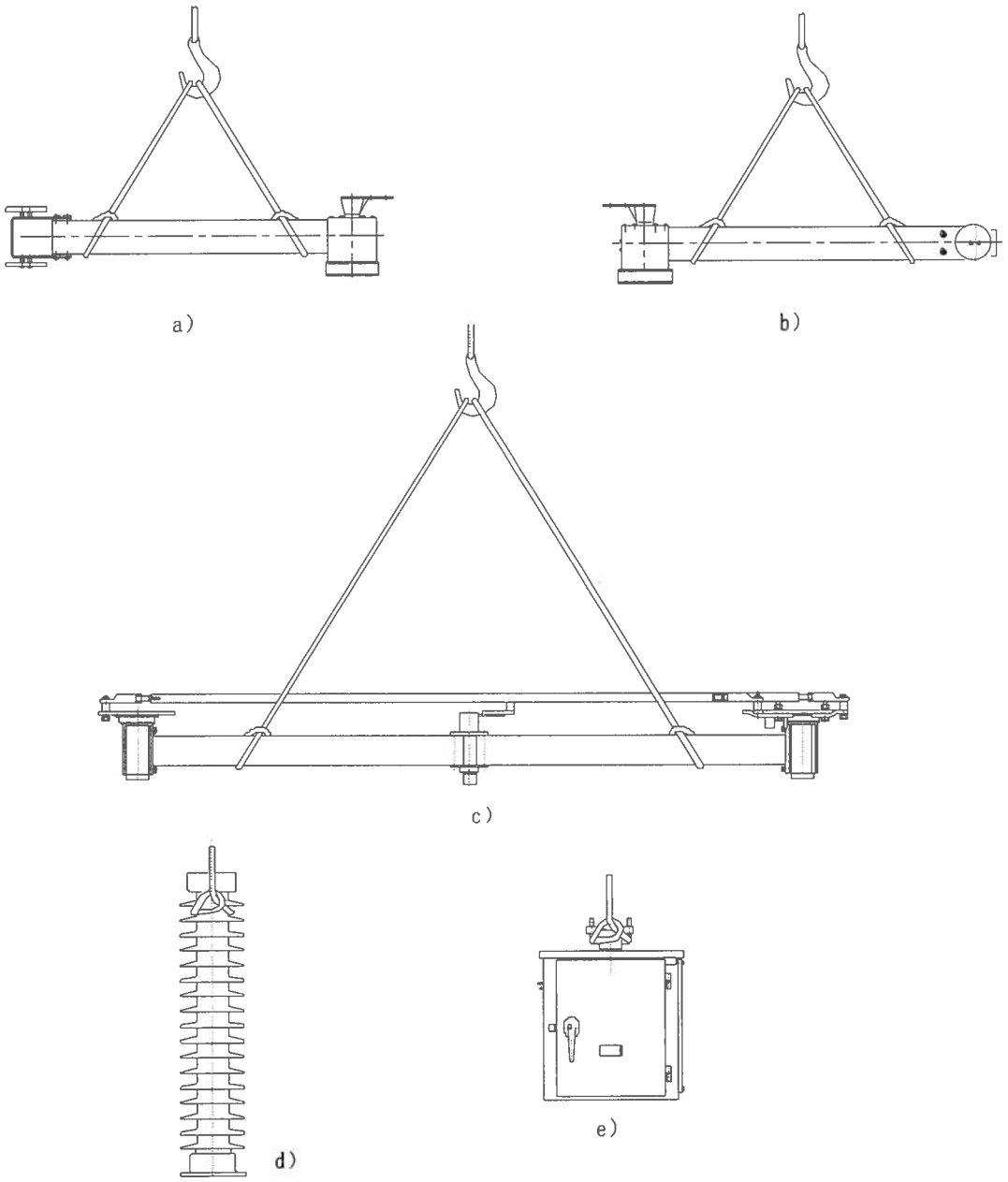

Fig.13 each component of hoisting schemes

Kawara Trade S.A.

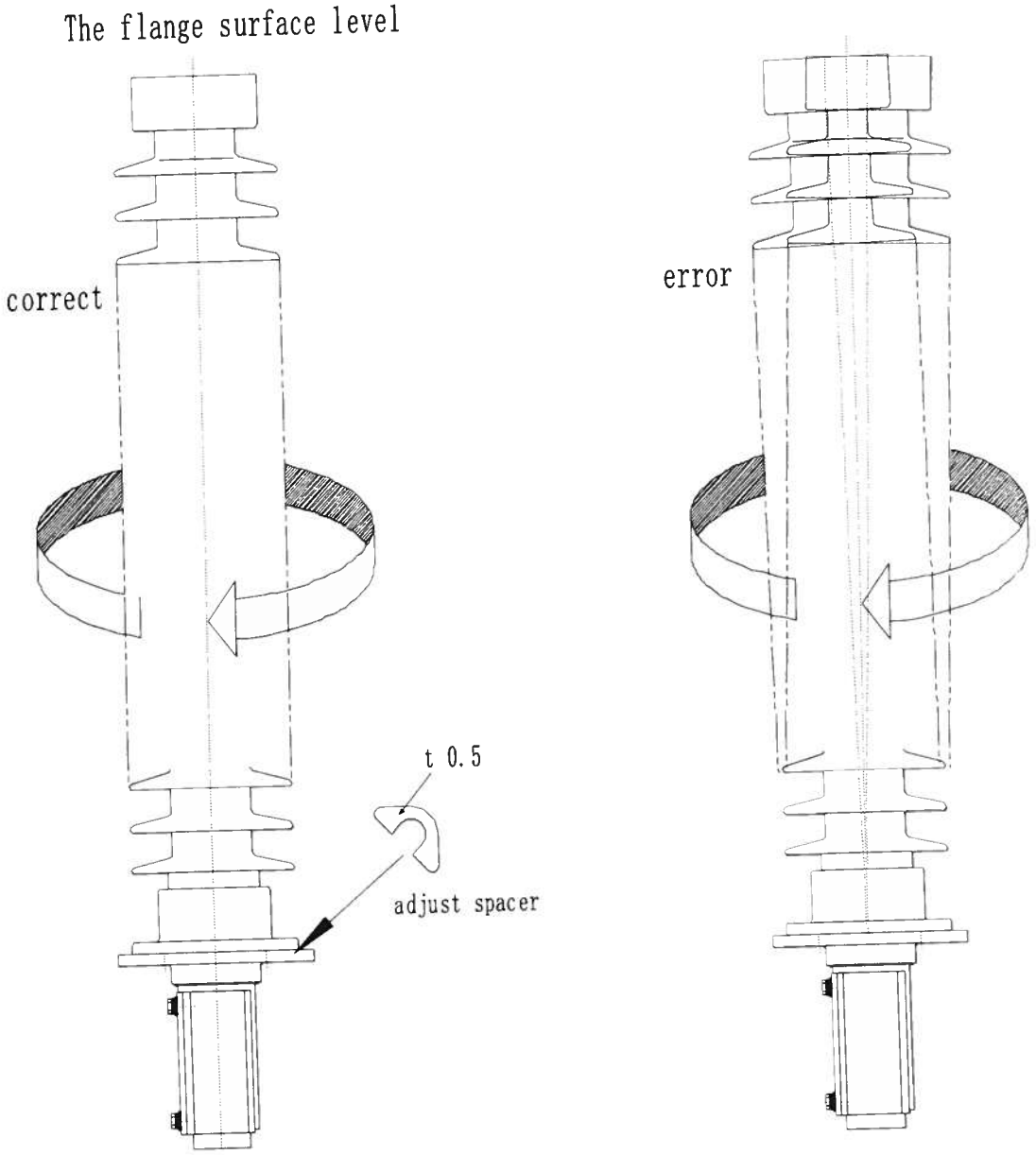

Fig.14 insulator installation schemes

Kawara Trade S.A.

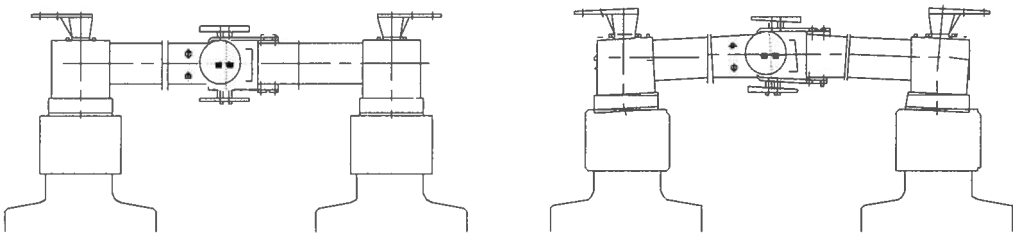

correct incorrect

a) Conductive arm installation

correct incorrect

b) Touch with an contactor coupling condition

Fig.15 several correct and incorrect erection of state

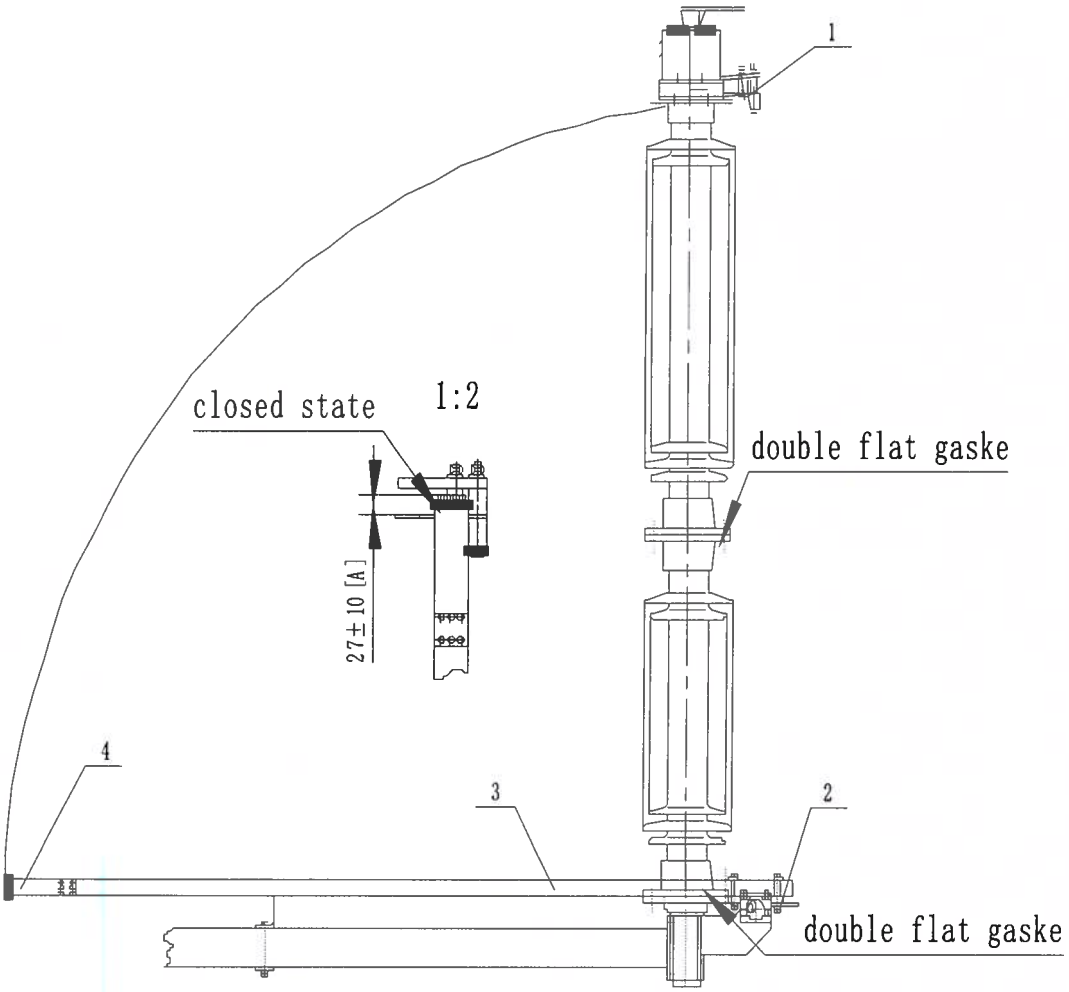

1. Static contact 2. Soft link 3. Conduct pole 4. Dynamic contact

Fig.16 earthing switch structure schematic drawing

Kawara Trade S.A.

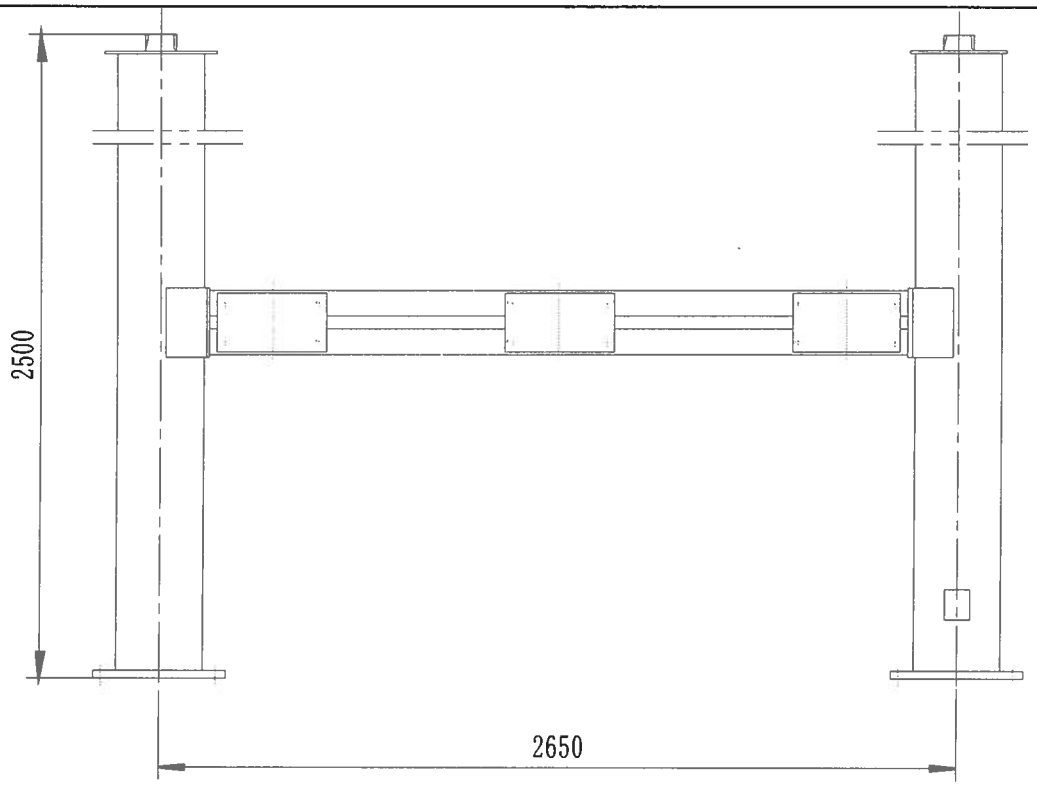

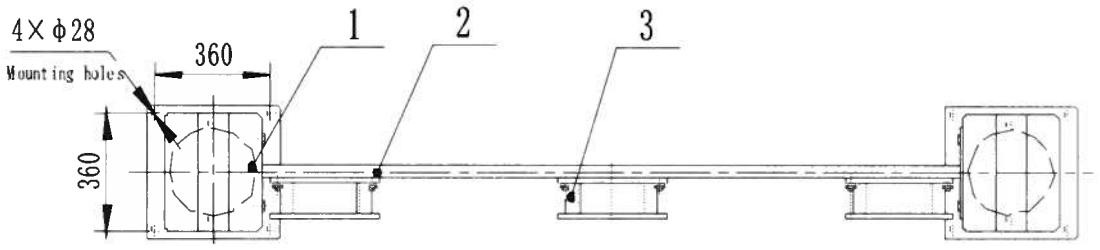

1. stent（5SR.040.21） 2. stent（5SR.040.22） 3. stent（5SR.040.23）

Note 1: figure 17 in sequence 1 stents height is according to the customer request matching, total 6 root, not specified height is 2500mm in the default

Note 2: figure 17 in sequence 2 stents only operation phase assembly, normal supporting one, supporting three phase roots when points operating.

Note 3: figure 17 in sequence number 3 stents when with normal form a complete set with operating mechanism in equal Numbers.

Note 4: the the graph is our regular stents (for reference only), specific steel stents height, phase spacing, steel stents installation dimensions by designing institute design shall prevail.

Fig.17 disconnector double earthing operation phase mounting bracket

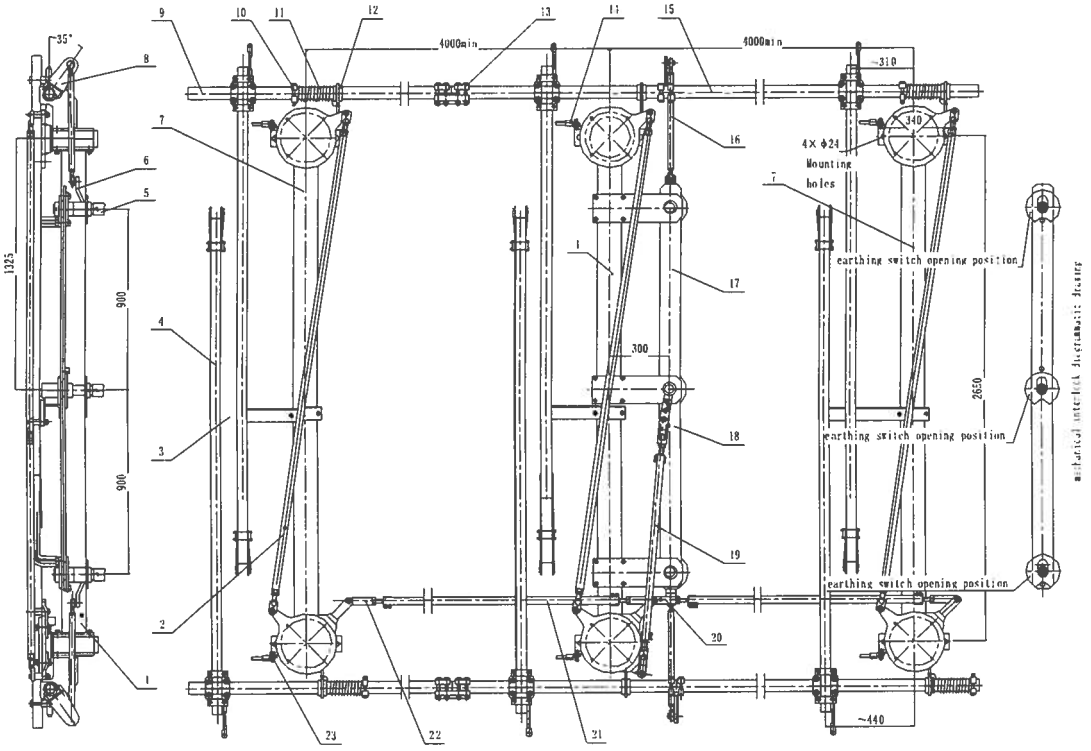

1. 1. The base (the Lord extremely) 2. Reverse lever3. earthing switch bracket 4. earthing switch conduct pole 5. Operation structure vertical shaft 6. earthing switch Lord turn arm 7. Base (edge extremely) 8. earthing switch driven turn arm 9. earthing switch connection tube (short) 10. Balance springs positioning pieces 11. earthing switch balance springs 12. Block circle13. Grounding switch connecting pipe connector 14. Grounding terminals 15. earthing switch connection tube (long) 16. earthing switch operating linkage 17. Interlocking panels inadequacy disconnector Lord turn arm 19. Isolating switch operating linkage 20. Connectors (21) dextral transtensional j isolating switch three extremely connecting rod 22. The union (levorotatory) 23. Grounding terminals

Fig.18 disconnector and earthing switch three extremely linkage installation schemes

Kawara Trade S.A.

CATÁLOGO TÉCNICO

Kawara Trade S.A.

公司地址：江苏省如皇市经济开发区惠民西路
Address: West Human Road, Economic Development District, Rugao, Jiangsu Province, P.R.China
邮　　编(Postal code): 226572
取单电话(Tel): 0513-87303639
传　　真(Fax): 0513-87530056　87514904
服务热线(Serv.Tel): 400-1165-888
投诉电话(Complain Tel): 0513-87512292
Http://www.sieyuan.com
E-mail: rggydq@188.com

(样本图片仅供参考，请不对行业抽样，版权所有，本公司保留修改权利。)

Sieyuan®

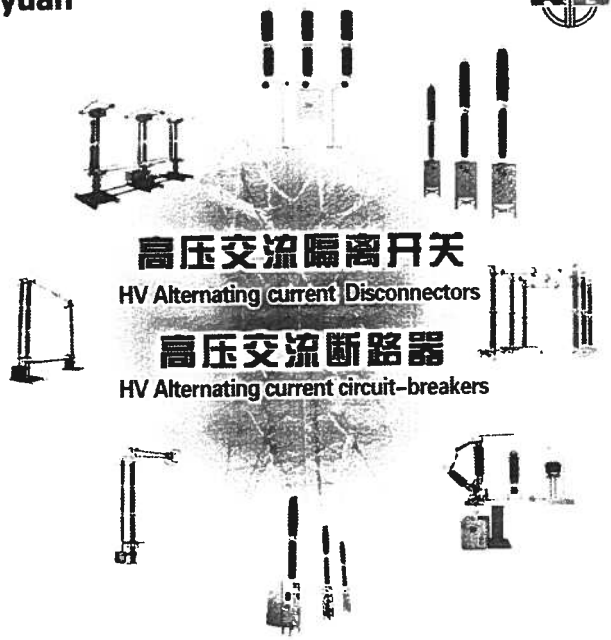

高压交流隔离开关
HV Alternating current Disconnectors

高压交流断路器
HV Alternating current circuit-breakers

使电能传输与分配更安全、更可控、更高效
Making power transmission and distribution safer, more controllable and more efficient

江苏省如高高压电器有限公司
JIANGSU RUGAO HIGH VOLTAGE ELECTRIC APPARATUS CO.,LTD.

目录 *Contents*

第一章 [illegible] 5

Chapter 1 Company Brief

第二章 40.5kV-252kV高压断路器 14

Chapter 2 40.5kV-252kV HV Circuit Breaker

[illegible] 15

[illegible] 19

[illegible] 23

[illegible] 28

[illegible] 30

第三章 隔离开关 33

Chapter 3 Disconnect Switch

[illegible] 34

[illegible] 37

[illegible] 40

[illegible] 43

[illegible] 47

[illegible] 51

[illegible] 55

[illegible] 59

[illegible] 63

[illegible] 65

[illegible] 68

[illegible] 70

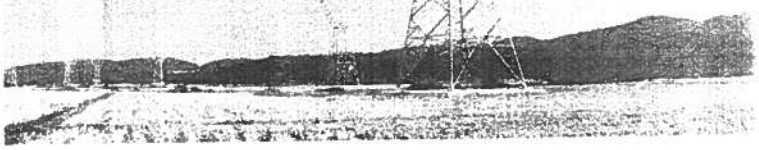

Sieyuan®

如高高压

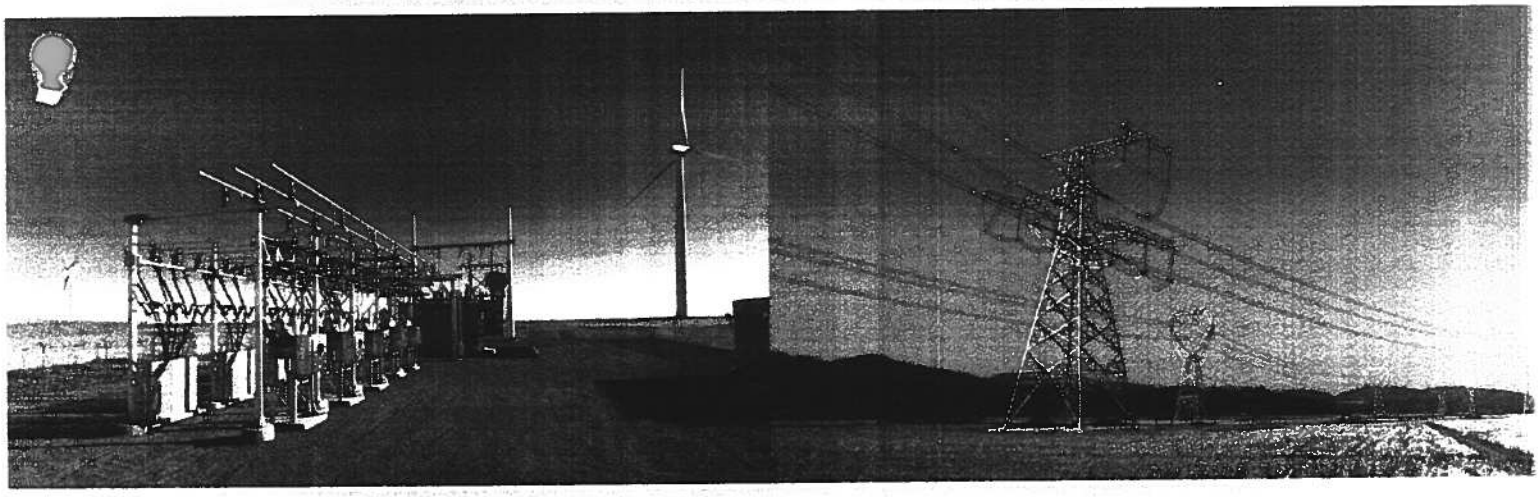

公司愿景

向全球客户提供一流的电气设备与服务，帮助客户安全、可靠、高效地使用和维护电力。

Company's vision

Provide first-class electrical equipments and services to global customers, and help them use and maintain the electric power safely, reliably and efficiently.

公司使命

使电能传输与分配更安全、更可控、更高效

Company's missions

To make power transmission and distribution safer, more controllable and more efficient

核心价值观

成就客户　群体奋斗　开放进取　正直诚信　自我批判　发展未来

Core Values

Serving Customers，Group Endeavors Open and Enterprising，Integrity Self-criticism，Future Development

第一篇 如高公司介绍
Chapter 1: Company Brief

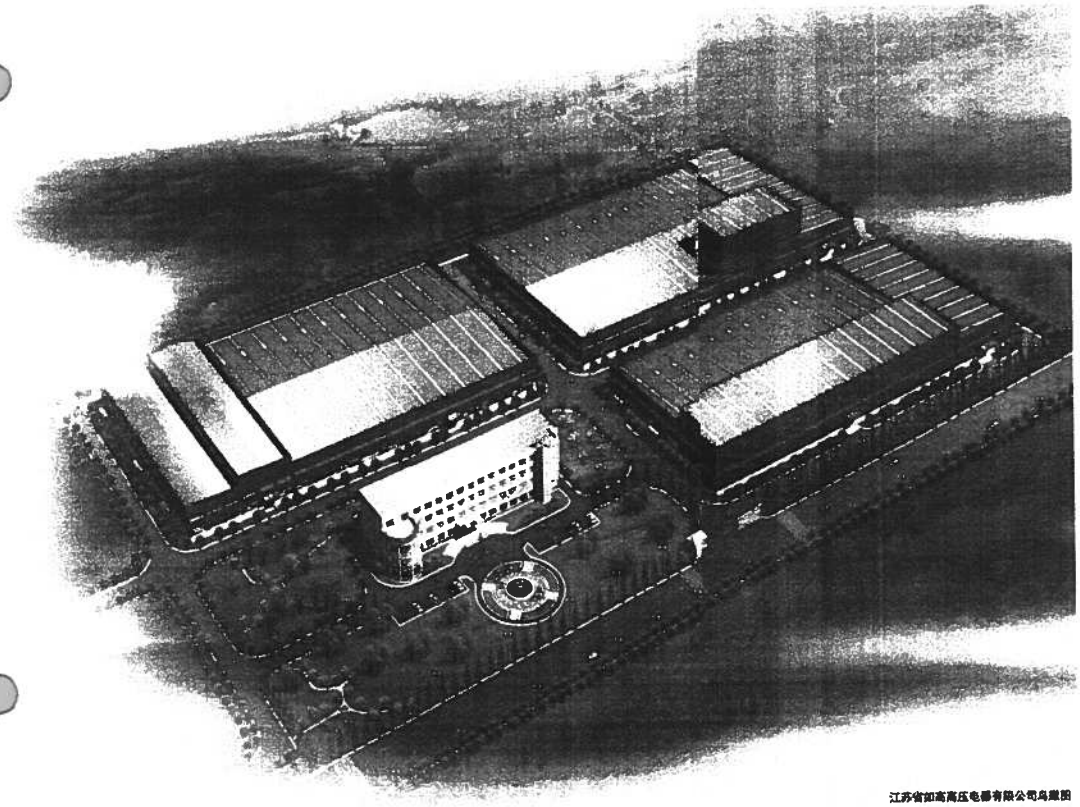

江苏省如高高压电器有限公司鸟瞰图
The Aerial View of the Company

公司概况

江苏省如高高压电器有限公司是一家专业的输变电设备研发与生产高新技术企业，拥有40多年研发与生产经验。主要生产800kV及以下高压交流隔离开关、252kV及以下SF₆断路器、40.5kV和31.5kV真空断路器。公司产品获得多项国家新型专利，并荣获江苏省高新技术产品、国家火炬计划产品等荣誉证书。产品通过国家权威试验机构和荷兰"KEMA"实验室的全部型式试验项目，产品技术达到国际先进水平。公司全面推动ERP和条形码管理系统，实行全寿命周期内质量管理，最大限度满足客户需求。

建有200000平方米的新型、高精度输变电设备的研发与生产基地。其中SF₆产品密封净化车间9000平方米、隔离开关装配车间12000平方米、现代化高压试验大厅、办公楼、生活区等设施1万多平方米。公司现有员工832人，建有一支年轻化、高素质、有凝聚力与创造力的管理团队。聘请国内多名专家顾问，做为产品研发的坚强后盾。工程技术人员和专业管理人员占员工总人数的50%。产品遍布全国各电站、电厂及大、中型工矿企业。

Company Brief

Jiangsu Rugao High Voltage Electric Apparatus Co., Ltd is a 40-years-old hi-tech enterprise professionally engaging in R & D of electric transmission and transformation equipments, high-voltage AC disconnect switch (800kV and below), SF_6 circuit breaker (252kV and below), and 40.5kV and 31.5 kV vacuum circuit breaker. The products have been awarded various credentials like new-type national patent, Jiangsu Provincial Hi-tech Product, and National Torch Plan. The products have been authenticated by the Chinese national testing authority and Holland's KEMA lab and reach the international advanced level. The Company has fully promoted the use of ERP and Bar code management system, practicing the quality management throughout the life cycle to maximize customer satisfaction.

At the 200000sq.m. new and high-precision R & D center for electric transmission and transformation equipments stand a 9,000 sq.m workshop for sealing and purifying SF_6 products, a 120,000 sq.m. workshop for assembling disconnect switches. The Company is now staffed with 832 employees and boasts a young management team characterized by high quality, cohesion and creativity. In addition, the Company has employed several experts and consultants to back up the product R & D. The engineering technicians and professional management members account for 50% of the headcount. The products are widely applied to power stations, power plants and large and medium-sized enterprises across China.

品牌之路Brand Strategy

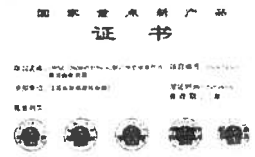

持续改进 精益求精 客户满意 服务社会

——这是我们的质量方针

Quality Goals: Continuous Improvement, Pursuing Perfection, Customer Satisfaction, Serving Society

ISO 9001: 2008质量管理体系认证书
ISO 9001: 2008 Quality Management System Certification

我们的目标是成为客户公认的一个提供高质量产品及优质服务的企业，公司全面实施ISO 9001质量管理体系，并获得"SGS集团"颁发的ISO 9001:2008质量管理体系认证证书；所有产品均通过"电能（北京）产品认证中心"的PCCC认证，并获得"采用国际标准产品标志证书"。

Our goal is to establish our company as a well recognized provider of high-quality products and services. To achieve this goal, the Company has been fully implementing ISO 9001 quality management system and has thus been awarded ISO 9001:2008 quality management system certification by SGS. All products have been certified by PCCC (Beijing) and have been awarded the certificate for "ADOPTING INTERNATIONAL STANDARD PRODUCT MARKING CERTIFICATE."

如高公司如何确保产品达到高质量

Rugao's Ways to guarantee the quality of products

1 | 2
3 | 4

优越的生产条件

Superior production conditions

1 隔离开关生产线
2 断路器生产线
3 全自动电镀生产线
4 灭弧室灯中工装

1 Disconnect switch production line
2 Circuit breaker production line
3 Automatic electroplating production line
4 Arcing chamber tooling

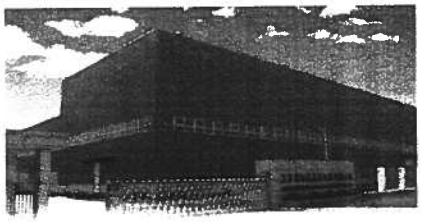

面积1.1万平方米宽敞明亮的装配厂房
11,000 sq.m. bright and spacious assembling plant

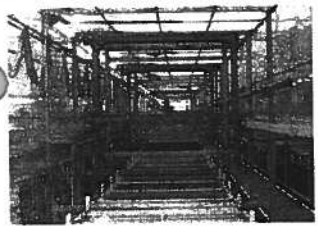

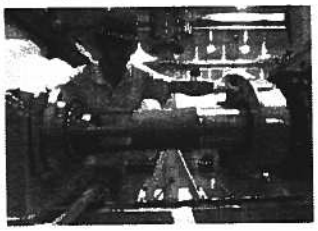

现代化的管理、优越的生产条件、精良的设备、先进的技术、完备的检测手段和严格的试验考核，是如高公司为电力系统提供优质产品的有力保障。

The quality of Rugao electric systems is strongly guaranteed by modernized management, superior production conditions, sophisticated equipment, state-of-art technology, sound inspection methods and rigid test & evaluation.

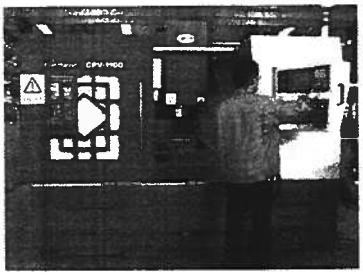

先进的技术、精良的设备

State-of-art technology and equipment

1 CPV-1100型立式加工中心
2 PDA-7000直读光谱仪
3 三坐标测量仪
4 3000kV冲击电压发生器

1 CPV-1100 model standing type processing center
2 PDA-7000
3 Three coordinate measuring mache (CMM)
4 3000kV impulse voltage generator

1 | 3
2 | 4

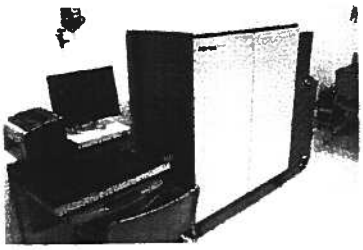

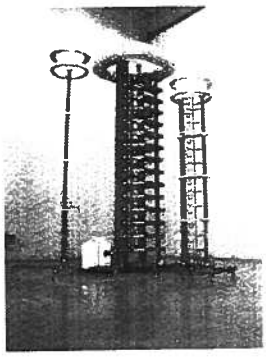

制造一流产品，提供一流服务，是如高人始终如一的追求

We consistently manufacture first-rate products and provide first-rate services.

我们的服务承诺：

确保售前、售中、售后与顾客进行有效沟通，认真处理顾客来电来函，做到件件有回复，事事有记录。

对顾客反馈的各类质量信息及时处理，省内24小时、外省48小时内高效处理意见或派出服务人员到达现场。

建立用户服务档案，关键零部件质量问题可分批追根溯源

Our commitments to service:

Ensure the effective communications with customers before, during and after services, conscientiously handle customer calls and correspondences, ensure that every inquiry will be replied and recorded;

Promptly treat various kinds of quality feedbacks from customers, decide on the treatment measures or dispatch service staffs to the site (24 hours within the province and 48 hours outside the province)

Set up the customer service archives to track the root of the quality problems with key parts and components

服务网络Service network:

如高公司本部Home office of Rugao Company:
电话Tel: 0513-87303639
传真Fax: 0513-87514904
0513-87530056
服务热线Service hotline:
400-1165-888
服务部(华东)East China:
电话Tel: 15162884008
服务部(华中)Central China:
电话Tel: 15190880633
服务部(华北)North China:
电话Tel: 15162888577
服务部(西北)Northwest China:
电话Tel: 15162883122
服务部(东北)Northeast China:
电话Tel: 15251390155
服务部(南网)China Southern:
电话Tel: 15062752277

老站改造The old station renovation

技能培训Technical training

现场安装Field erection

客户利益至上 最大限度满足客户需求

Customer interests-focused to maximally satisfy the demands of customers

公司成立江苏省如高送变电工程有限公司，是江苏省如高高压电器有限公司的全资子公司，主要经营高压设备安装承装与承修业务，包括输配电控制设备制造与销售,公司现有职工约300人，其中专业技术与安装调试人员近200人，占职工人数的80%以上。

不断创新，使如高加快前进的步伐。
品质至上，使如高隔离开关遍布全国走向世界。
Continuous innovation drives Rugao to stride;
Superior quality enables Rugao isolating switch to go out of China into the world.

产品覆盖网络图
Product marketing network

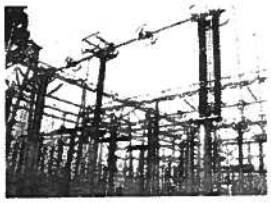

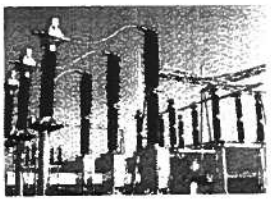

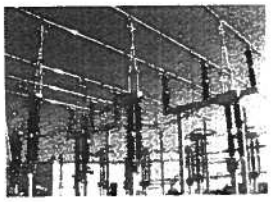

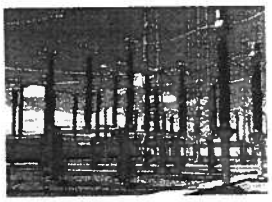

第二篇 40.5kV~252kV高压断路器
Chapter 2: 40.5kV~252kV HV Circuit breaker

如高牌断路器产品的资质
Qualifications for Rugao circuit breaker

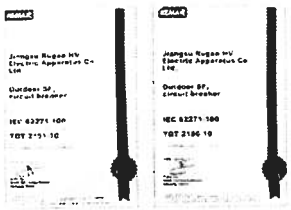

型式试验报告
Type Test Reports

LW58-252/T4000-50高压六氟化硫断路器
LW58-252/T4000-50 high voltage SF_6 circuit breaker

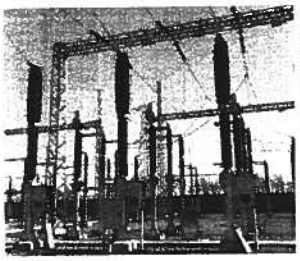

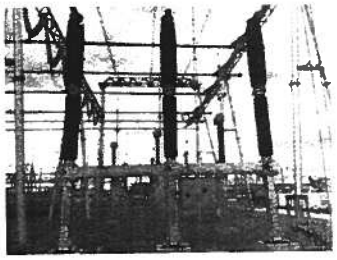

产品简介 Product Introduction

LW58-252/T4000-50型自能式高压交流六氟化硫断路器为户外三相瓷柱式电气设备，是江苏省如高高压电器有限公司为满足我国电力市场的需求、在充分总结国内外同类产品制造使用经验的基础上，融合了多方先进的设计理念，自行设计开发的新产品。

LW58-252/T4000-50 outdoor self-energy power high voltage SF_6 circuit breaker is suitable for the electric power system of AC 50Hz and 252kV, which is the control and protection equipment for the electric power system, as well as for circuit breaker connection.

该产品以SF_6气体作为灭弧和绝缘介质，灭弧室采用了世界上先进的自能加压气双动式灭弧室结构，配备了新型的弹簧操控机构从而降低了操作功，具有电寿命长、操作功小、噪声低、可靠性高等特点，各项技术指标与达到国内外同类产品的先进水平。

The product uses SF_6 gas as the arc extinguishing and insulation medium, adopting the self-energy power arc extinguishing double-action-type interrupter structure technique, equipped with new-type spring operating mechanism., with features of strong switching ability, less operating power, bw noise and high reliability, the technical indicators have reached similar products in domestic and international advanced level.

其中三相机械联动将原来的三相SF_6断路器每相配一台操动机构变成三相配一台操动机构，使操动机构的数量减少了三分之二，提高了三相SF_6断路器联动的可靠性，确保其在运行中不会出现缺相运行。

Three-phase SF_6 circuit breaker, which is operated by one mechanism for one pole, is changed to three-phase mechanical linkage circuit breaker which is operated by one mechanism. The decrease of mechanism improves the linkage reliability for three-phase SF_6 circuit breaker to avoid lack of phase operation.

■ 产品主要特点Main characteristic

1. 灭弧室采用自能加压气双动式结构，开断性能更稳定；
2. 操作功小，产品可靠性高，机械寿命10000次；
3. 动、静弧触头采用钨铜整体烧结的结构，耐高温，在电弧作用下烧损小，满容量开断20次；
4. 密封性能可靠，SF_6年漏气率远小于0.5%；
5. 产品零部件除潮工艺严格：SF_6水分含量远低于同类产品；
6. 外绝缘爬电比距31mm/kV，耐污能力强；
7. 灭弧室喷片采用特殊的锌基合金，耐高温、重量轻，开断性能稳定可靠；
8. 喷口采用进口聚四氟乙烯添加特殊材料压制而成，耐电强度高、耐烧、不变形，抗喷变性能好；
9. 二次回路电器元件和SF_6密度继电器采用优质进口或合资厂家产品；
10. 机构内管要零部件采用优质合金钢锻造而成，强度高，耐磨损，能保证断路器频繁操作，故障率低；

1. Adopting the self-energy power arc extinguishing and double-action-type structure technique breaking capacity is more stabuzation.
2. This products has less operating power ,high reliability and mechanical Life cycle up to 10,000 times.
3. Dynamic and fixed contact using copper tungsten arc overall sintered structure, withstand high temperature, under the arc burning in a small, full breaking capacity of more than 20 times.
4. Reliable sealing performance: It is guaranteed that the SF_6 gas has an annual leakage of far less than 0.5 percent;
5. Strict dehumidification process for component parts of the product the SF_6 moisture content is far lower than similar products.
6. The circuit breaker has high insulation level and the creepage distance is more than31mm/kV;
7. The valve plate of the arc extinguishing compartment is made of new-type light weight Zinc-base alloy.Compared with the traditional materials adopted for similar products,this material has more stable and reliable gas feature and breaking performance
8. The spout made of import PTFE mixed with other micro-components.It has stable breaking performance and strong ablation resistance.
9. Electrical units in secondary circuit and SF_6 density relay are high-quality import or joint-venture products.
10. The important component parts in the mechanism are forged with quality alloy steel for high strength and abrasion resistant, which can ensure low fault rate under frequent operation of the breaker

■ 灭弧室结构图Interrupter structure

A. 合闸位置Closd position

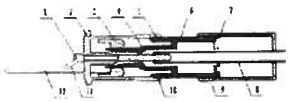

B.开始分闸Start to open

C.灭弧触头分离Interrupter contact separation

D 分闸位置Open position

1. 静弧触头Fixed arc contract
2. 触头座Contact Block
3. 屏蔽罩Shield
4. 喷口Spout
5. 上触头Main contract
6. 活塞Piston
7. 喷嘴Valve
8. 动弧触头Moving arc contact
9. 气缸Cylinder
10. 主触头Main Contact
11. 传动块Transmission block
12. 牵引杆Traction rod

■主要技术参数Main technical parameters

1) 断路器主要技术参数表 The main specifications of the breaker

序号 Serial No.	名称 Name		单位 Unit	数据 Data
1	额定电压Rated Voltage		kV	257
2	额定工频耐受电压 Rated Power Frequency Withstand Voltage(1min)	对地 / 相间 To earth / phase to phase	kV	552
		开关断口 Across switching device		552+175.2
3	额定雷电冲击耐受电压 Rated Lightening Impulse withstand voltage	对地 / 相间 To earth / phase to phase		1260
		开关断口 Across switching device		1260+247.2
4	额定频率 Rated Frequency		Hz	50/60
5	额定电流 Rated Current		A	4000
6	额定短路开断电流 Rated short-circuit breaking current Isc		kA	50
7	额定短路关合电流（峰值）Rated short-circuit making current (peak)			125
8	额定短时耐受电流 Rated short-time withstand current			50
9	额定峰值耐受电流 Rated peak withstand current			125
10	额定失步开断电流 Rated out-of-phase breaking current			12.5
11	近区故障开断电流 Short-line fault breaking current			90%Isc 75%Isc
12	额定短路开断电流次数The number of rated short circuit breaking current Ik		次/Times	20
13	额定短路持续时间 Rated duration of short circuit		S	3
14	首开极系数 First-pole-to-clear Factor			1.5
15	额定线路充电开合电流 Rated line-charging breaking current		A	200
16	额定操作顺序 Rated Operating Sequence			O-0.3S-CO-180S-CO
17	额定压力Rated pressure(gouge pressure at 20℃)		MPa	0.5
18	六氟化硫气体漏气率 Annual leakage of SF_6 gas		%	<0.5
19	气体水份含量 Gas humidity content（L/L）		L/L	≤150×10⁻⁶
20	机械寿命 Mechanical endurance		次/Times	10000
21	爬电距离 Creepage Distance	开关断口 Across switching device	mm	≥6060
		对地 / 相间 To earth / phase to phase		≥6900/≥7812
22	每相六氟化硫气体重量 Weight of SF_6 gas filled for each pole		kg	10
23	每相断路器重量 Weight of each pole			1800

2) 机构主要技术参数表 Main Specifications of the mechanism

序号 Serial No.	名称 Name		单位 Unit	数据 Data
1	储能电机 Energy-store motor	额定电压 Rated Voltage	V	DC220/AC220
		正常工作电压范围 Normal work voltage range		85%~110%
		功率 Power	W	720
2	电机储能时间 Time of energy-store motor		S	≤20
3	分合闸线圈额定电压 Voltage of opening and tripping coil		V/A	DC110V、DC220V

Kawara Trade S.A

4	辅助开关 auxiliary switch	额定电压 Rated Voltage	V	DC220V/AC220/DC110
		额定电流 Rated current	A	3/10/5
		辅助开关的接点对数 Contact of auxiliary switch	对	11/11
5	加热及照明回路电压 Voltage of heater and lighting circuit		V	AC220

3) 产品的机械调整参数Mechanical adjustment of the product parameter table

序号 Serial No	名称 Name	单位 Unit	数据 Data
1	断路器极间中心距 Clearance between poles	mm	3000–4000
2	开断时间 Breaking time		≤50
3	合分时间 Close-Open time		≥70（when running）
4	分合时间 Open-close time		300及以上可调
5	三极分闸不同期性 Non-simultaneity of three-poles opening	ms	≤3
6	三极合闸不同期性 Non-simultaneity of three-poles closing		≤4

■ 订货须知Instructions on placing orders

断路器型号、规格；
额定电气参数（电压、电流、开断电流等）；
使用环境条件（环境温度、海拔高度、环境污秽等级）；
额定控制回路电气参数（储能电机额定电压、分合闸线圈额定电压）；
需要的备品、备件及专用设备、工具的名称和数量（需另行订货）；
一次上端子的接线方向。

Model and format of the circuit breaker;
Rated electrical parameters (voltage, current, breaking current, etc);
Working conditions for using (environment temperature, altitude, and environment pollution level);
Rated control circuit electrical parameters (Rated voltage of energy-store motor and Rated voltage of opening, closing coil);
Names and quantities of spare items needed, parts and special equipment and tools (to be otherwise ordered).
The wire connecting direction of the primary upper terminal.

LW36-126(W)/ LW36-145(W)/ T3150-40 高压六氟化硫断路器

LW36-126(W)/ LW36-145(W)/ T3150-40 high voltage SF_6 circuit breaker

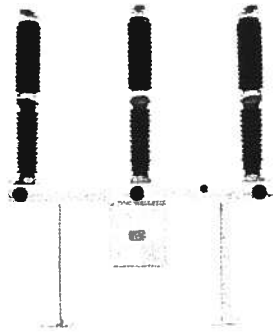

■ 产品简介Product introduction

LW36-126(145)(W)/T3150-40型自能式高压交流六氟化硫断路器为户外型产品，适用于海拔不超过3000米，环境温度不低于-40℃(低温产品适用于环境温度为-45℃)，污秽等级不高于Ⅳ级地区的交流50Hz或60Hz，最高电压为126/145kV的电网中，用以切断额定电流、故障电流或转换线路，实现对电力系统的控制和保护，也可作为联络断路器使用。

LW36-126(145)(W)/T3150-40 self-energy power HV AC SF_6 circuit breaker is an outdoor product. It is used in electricity grids with altitudes of no more than 3000m (product designs for 3000m are available), environment temperatures of no less than -40℃(low-temperature products are suitable for -45℃), local pollution classes of no more than Class IV, and maximum voltage of 126/145kV to cut off rated currents, fault currents, or switching lines in order to implement control and protection of electricity systems. It can also be used as a connection circuit breaker.

该产品以SF_6气体作为灭弧和绝缘介质，采用了国际最先进的自能式灭弧技术，配用新型的弹簧操动机构，具有电寿命长、操作功小、噪声低、可靠性高等特点，其结构简单、体积小、不检修周期长、在目前电力设备趋向无油化、大容量的进程中，可完全替代同类型的进口产品。

By adopting SF_6 gas as the arc extinguisher and insulation medium, using the most advanced self-energy power arc extinguishing technology in the world, and being equipped with new-type spring actuating mechanism, this product has features such as long electrical endurance, less operating power, low noise, and high reliability. It has a simple structure, small size, long maintenance-free cycle. In the current trend of oil-free and high-capacity electricity equipments, it can completely replace import products in the same field.

■ 结构特点Main characteristic

LW36-126(145)(W)/T3150-40型自能式高压交流六氟化硫断路器是国家"九五"科技攻关项目，是具有国际先进水平的

Kawara Tr

新型断路器。其主要结构和性能特点如下：

LW36-126(145)(W)T3150-40 self-energy HV AC SF_6 circuit breaker is a hard-nut science and technology problem tackingproject in the national "Ninth Five-year" plan. It is a new-type circuit breaker with advanced International level. Its main structure and perfor-mance features are as follows

性能特点——安全可靠

① 开断性能可靠：该断路器能连续开断40kA短路电流22次不检修。

② 机械操作性能可靠：断路器连续操作机械寿命达10000次以上。

③ 载流功能可靠：进行3780A温升试验，各点温升值仍有较大的裕度。

④ 绝缘能力可靠：外绝缘爬电比距≥31mm/kV，耐污秽能力强，适用于海拔不超过3000m的恶劣环境安全运行。

⑤ 密封性能可靠：确保六氟化硫气体年漏气率远小于0.5%。

⑥ 产品零部件除潮工艺严格：SF_6水分含量远低于同类产品。

⑦ 结构简单，检修周期长，现场安装调试方便。到2008年有7年3500余台安全可靠运行经验，本公司该产品的产销量居全国首位，可替代进口或合资产品。

Performance features -safe and reliable

① Reliable breaking performance. This circuit breaker can consecutively break 40kA short circuit current for 22 times without overhaul.

② Reliable mechanical operating performance. The mechanical life of the circuit breaker under continuous operation can reach up 10000 times after simple adjustment.

③ Reliable current-carrying function. After 3780A temperature-rise test, the temperature-rise values at all points still have much margin.

④ Reliable insulation ability: creepage distance of external insulation≥31mm/kV, strong pollution resistance, suitable for safe running in hard environments with an altitude of no more than 3000m

⑤ Reliable sealing performance, it is guaranteed that the SF_6 gas has an annual gas leakage rate of far less than 0.5%

⑥ Strict dehumidification process for component parts of the product: the SF_6 water content is far lower than similar products

⑦ Simple structure, long overhaul cycle, convenient on-site installation and debug, safe and reliable running experience of 7 years and more than 3500 sets by 2008, the production and sales volume of this product of our company is in the leading position of the entire country. It can replace import products or joint-venture products

结构特点——独创新颖

① 断路器采用自能式灭弧原理，操作功低。

② 灭弧室阀片采用新型的铜基合金制成，与同类产品采用传统材料相比，气流特性和开断性能更稳定可靠。

③ 喷口采用进口PTFE（聚四氟乙烯）添加其它微量组分构成，开断性能稳定，耐烧蚀能力强。

④ 采用卷安装件设备，其抗弯性能好，生产工艺先进，质量控制严格可靠，能保证断路器的安全运行。

⑤ 断路器绝缘拉杆采用本公司特有的防松措施，使断路器运行更可靠。

⑥ 采用操作功小、重量轻、噪声低的弹簧操动机构，无漏油，可靠性高。采用高强度铸铝机架，其强度高，无焊接应力，外观美观。

⑦ 机构内重要零部件采用优质合金钢锻造而成，强度高，耐磨损，能保证断路器频繁操作，故障率低。

⑧ 二次回路电器元件和SF_6密度控制器采用优质进口或合资厂家产品。

⑨ 产品外观新颖明快，结构紧凑，安装底架采用厚钢板整体弯制而成，表面采用热浸锌工艺，外露紧固件采用高强度的热镀锌螺栓，相间传动连杆采用高强度的铝型材或不锈钢型材，机构箱体为不锈钢，产品的抗蚀性能优良。

⑩ 该产品是国家"九五"重点科技攻关项目，荣获"江苏省高新技术产品"称号及江苏省优秀新产品"金牛奖"荣誉，并获得国家重点新产品证书。

Structural features-original and novel

① Self-energy arc extinguishing principle is adopted for the circuit breaker. The operating power is low.

② The valve plate of the arc extinguishing compartment is made of new-type lightweight Zinc-base alloy. Compared with the traditional materials adopted for similar products, this material has more stable and reliable gas feature and breaking performance.

③ The spout is made of import PTFE (polyfluoroethylene) mixed with other micro-components. It has stable breaking perfor-mance and strong ablation resistance.

④ Xi'an Shuangjie Porcelain sleeve is adopted. It has good bending resistance, advanced production process, and strict and reliablequal-ity control, which can ensure the safe running of the circuit breaker

⑤ Our company's unique locking-up measure is used for the insulating pulling rod of the breaker to ensure more reliable running of the breaker

Spring actuating mechanism with small operating power, light weight, and low noise is adopted for zero leakage and high reliability. High-strength cast aluminum machine frame is adopted for high strength, zero welding stress, and pleasing exterior appearance.

The important component parts in the mechanism are forged with quality alloy steel for high strength and abrasion resistance, which can ensure low fault rate under frequent operation of the breaker.

Electrical units in secondary circuits and SF_6 density controller are high-quality import or joint-venture products.

The product has a novel and lively exterior appearance and compact structure. The installation foundation frame is made of thick steel board being overall bended. Hot zinc impregnation is adopted for the surface. The exposed fastening pieces are high-strength hot-galvanized bolts. The interval driving connecting rods are made of high-strength aluminum sectional material or stainless steel sectional material. The case of the mechanism is made of stainless steel. The product has excellent anti-corrosion performance.

The product is a key hard-nut science and technology problem tackling project in the national "Ninth Five-year" plan. It has gained the title of "High and New Technology Product in Jiangsu Province" and the honor of "Gold Bull Prize" of excellent new products in Jiangsu Province. It has also achieved Certificate of National Key New Product.

主要技术参数Main technical parameters

1) 断路器主要参数表Table of main parameters of the circuit breaker

序号 Serial No.	名称 Name		单位 Unit	数据 Data	
1	适用环境温度Ambient temperature		°C	-50℃ ~ +55℃	
2	额定电压Rated voltage		kv	145	126
3	额定工频耐受电压（1min）Rated power frequency withstand voltage (1min)	对地 / 相间 To earth / phase to phase	kv	352	294 4*
		开关断口 Across switching device		403.2	294.4+93.44*
4	额定雷电冲击耐受电压Rated lightning impulse withstand voltage	对地 / 相间 To earth / phase to phase	kv	832	704*
		开关断口 Across switching device		960	704+131.84*
5	额定频率Rated frequency		Hz	50/60	
6	额定电流Rated current		A	3150	3150
7	首开极系数First pole to clear factor			1.5	
8	额定短路开断电流（Isc）Rated short-circuit breaking current (Isc)		kA	40	40
9	额定短路关合电流（峰值）Rated short-circuit marking current (peak)			100/104	100
10	额定短时耐受电流Rated short-time withstand current			40	40
11	额定峰值耐受电流Rated peak withstand current			100/104	100
12	额定短路持续时间Rated duration of short-circuit		s	4	4
13	额定失步开断电流Rated out-of-phase breaking current		kA	10	10
14	近区故障开断电流Short-line fault breaking current			90%Isc, 75%Isc	90%Isc, 75%Isc
15	额定线路充电开合电流Rated line charging breaking current		A	31.5	31.5
16	额定操作顺序Rated operating sequence			O-0.3s-CO-180s-CO	
17	主回路电阻Resistance of main contact		μΩ	≤35	≤35
18	额定六氟化硫气体压力（20℃表压）Rated SF_6 gas pressure (20℃ gauge pressure)		MPa	0.6/0.7	0.50
19	报警/最低功能压力（20℃表压）Alarm/minimum functional pressure (20℃ gauge pressure)			0.55/0.5(50Hz) 0.65/0.60(60Hz)	0.4/0.35
20	SF_6气体年漏气率Annual leakage of SF_6 gas		%	≤0.5	≤0.5
21	气体含水量（L/L）（20℃，交接时）Gas humidity content (L/L) (20℃ at handover)		L/L	≤150×10⁻⁶	≤150×10⁻⁶
22	机械寿命Mechanical endurance		Times	10000	10000
23	无线电干扰电平Radio interference level		mv	≤500	≤500
24	爬电距离Creepage distance	开关断口 Across switching device	mm	4500	
		对地 / 相间 To earth / phase to phase		4500	
25	每台充入SF_6气体质量Weight of SF_6 gas filled for each CB		kg	10	8
26	每台断路器质量Weight of one set of CB			1700	1700

注：带"*"数据应根据海拔修正系数K进行修正：海拔2000m，K=1.13；海拔3000m，K=1.28

Notes: parameter value with "*" is corrected by altitude correction coefficient K: altitude 2000m, K=1.13, altitude 3000m, K=1.28

2) 机构主要技术参数表Table of main technical parameters of the mechanism

序号 Serial No	名称 Name		单位 Unit	数据 Data
1	辅助回路电压Voltage of auxiliary circuit		V	DC220 or AC220
2	分、合闸线圈电压/电流 Voltage/current of opening/Closing coil		V/A	DC110/4; DC220/2.
3	储能电机 Energy-store motor	额定电压Rated voltage	V	DC220 or AC220
		正常工作电压范围Normal working voltage range		85%~110%
		功率Power	W	720
4	电动机储能时间Time of energy-store motor		s	≤20
5	加热器及照明回路电压Voltage of heater and lighting circuit		V	AC220
6	辅助开关额定电压Rated voltage of auxiliary switch			DC220 or AC380
7	辅助开关额定电流Rated current of auxiliary switch		A	3（DC220V）/5（DC110V）
8	辅助开关接点数Number of auxiliary contacts			11常开+11常闭 11 normally opened, 11 normally closed

3) 产品的机械调整参数表Table of product mechanical adjustment parameters

序号 Serial No	名称 Name	单位 Unit	数据 Data
1	断路器极间中心距Clearance between poles	mm	1700
2	开断时间Breaking time		≤50
3	合-分时间Close - open time		>70(when running)
4	分-合时间Open - close time	ms	300及以上可调
5	三相分闸不同期性Non-simultaneity of three - phase opening		≤2
6	三相合闸不同期性Non-simultaneity of three - phase closing		≤3

■ 订货须知Order notice

1. 断路器型号、规格；
2. 额定电气参数（电压、电流、开断电流等）；
3. 使用环境条件（环境温度、海拔高度、环境污秽等级）；
4. 额定控制回路电气参数（储能电机额定电压、分合闸线圈额定电压）；
5. 需要的备品、备件及专用设备、工具的名称和数量（需另行订货）；
6. 一次（端子的接线方向）。

1. Model and format of the circuit breaker;
2. Rated electrical parameters (voltage, current, breaking current, etc);
3. Working conditions for using (environment temperature, altitude, and environment pollution level);
4. Rated control circuit electrical parameters (power-storage electromotor rated voltage and brake separating and closing cable coil rated voltage);
5. Names and quantities of spare items needed, parts and special equipment and tools (to be otherwise ordered);
6. The wire connecting direction of the primary upper terminal.

LW36-72.5(W)/T3150-40高压六氟化硫断路器

LW36-72.5(W)/T3150-40 self-energy outdoor HV AC sulfur hexafluoride circuit breaker

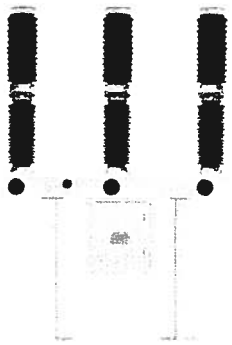

■ 产品简介Product introduction

LW36-72.5型自能式高压交流六氟化硫断路器为户外三相瓷柱式电气设备，主要适用于高寒地区交流50Hz或60Hz 72.5kV电力系统中（一般地区电站及-42℃高寒地区电站用）。该产品可进行频繁操作，并可作为联络断路器使用。

LW36-72.5 self-energy outdoor HV AC sulfur hexafluoride circuit breaker is an outdoor three-phase porcelain column electrical equipment mainly used in AC 50Hz or 60Hz, 72.5kV electricity systems in extremely cold regions (for electric stations in general regions and -42℃ extremely cold regions). This product can be operated frequently and used as a connection circuit breaker.

■ 产品性能Structural features

- C. 高性能——额定通流能力强：3150A，-40℃时短路开断能力大：40kA。
- D. 高寿命——电寿命：40kA x 21次（25kA x 31次），机械寿命：达10000次。
- 1. 高可靠性——灭弧室结构与LW36-126共用，产品内绝缘裕度大，弹簧结构采用摩擦锁合金机构，结构简单，可靠性高，达千帧操作。
- 2. 开断性能可靠。
- 3. 密封可靠，SF_6年温气率 < 0.5%。
- 4. 高海拔运行环境——适于IV级污秽环境。
- 5. 多结构形式——一般瓷瓶支柱式和手车式。

- C. High performance -strong rated circulating ability: strong short circuit breaking ability at 3150A -40℃: 40kA
- D. Long service life -electrical endurance: 31.5kA=21times (25kA=31times), mechanical life: 10000 times

- High reliability -sharing the arc extinguishing chamber structure with LW36-126; great product internal insulation redundancy, overall cast aluminum alloy frame adopted for the spring structure; simple structure and high reliability; suitable for frequent operations.
- Reliable breaking performance.
- Reliable sealing performance, Annual leakage of SF_6 gas ≤0.5%
- Meeting the requirements of hard running environments -suitable for Class IV polluted environments.
- Multi-structure forms-usually porcelain column type and handcart type.

■ 主要技术参数Main technical parameters

1) 断路器主要技术参数表Table of main parameters of the circuit breaker

序号 Serial No.	名称 Name		单位 Unit	数据 Data
1	额定电压Rated voltage		kV	72.5
2	额定工频耐受电压（1min） Rated power frequency withstand voltage (1min)	对地 / 相间 To earth / phase to phase	kV	204.8
		开关断口 Across switching device		204.8+53.76*
3	额定雷电冲击耐受电压 Rated lightning impulse withstand voltage	对地 / 相间 To earth / phase to phase		486.4
		开关断口 Across switching device		486.4+75.52*
4	额定频率Rated frequency		Hz	50/60
5	额定电流Rated current		A	3150
6	额定短路开断电流Rated short-circuit breaking current Isc		kA	40
7	额定短路关合电流（峰值）Rated short-circuit making current (peak)			100/104
8	额定短时耐受电流Rated short-time withstand current			40
9	额定峰值耐受电流Rated peak withstand current			100/104
10	额定失步开断电流Rated out-of-phase breaking current			10
11	近区故障开断电流Short - line fault breaking current			90%Isc, 75%Isc
12	异相接地故障开断电流Double earth fault breaking current			34.8
13	额定短路开断电流的分开断次数Times of rated short-circuit breaking current		Times	20
14	额定短路持续时间Rated duration of short - circuit		s	4
15	首开极系数First pole to clear factor			1.5
16	额定线路充电开断电流Rated line charging breaking current		A	10
17	额定操作顺序Rated operating sequence			O-0.3s-CO-180s-CO
18	额定SF_6气体压力/补气报警压力/操作闭锁压力（表压，20℃） Rated SF_6 gas pressure/Gas refilling alarm pressure/Operation lockout pressure (gauge pressure, 20℃)		MPa	0.4/0.36/0.32/0.7/0.65/0.6
19	SF_6气体年漏气率Annual leakage of SF_6 Gas		%	≤0.5
20	SF_6气体水份含量（20℃，交接时）SF_6 gas humidity content (L/L) (20℃ at handover)		L/L	$\leq 150 \times 10^{-6}$
21	机械寿命Mechanical endurance		Times	10000
22	合分时间Close-Open time		ms	≥70 (when running)
23	爬电距离Creepage distance	开关断口 Across switching device	mm	≥2585
		对地 / 相间 To earth / phase to phase		≥2248
24	每台用六氟化硫气体重量Weight of SF_6 gas filled for one set of CB		kg	6/8
25	每台断路器重量Weight of one set of CB			1300

注：带*数值按海拔修正系数K进行修正，海拔2000m，K=1.13；海拔3000m，K=1.28

Notes: parameter value with "*" is corrected by altitude correction coefficient K. altitude 2000m, K=1.13, altitude 3000m, K=1.28

2) 机构主要技术参数表Table of major technical parameters of the mechanism

序号 Serial No.	名称 Name		单位 Unit	数据 Data
1	储能电动机 Energy-store motor	正常电压范围Normal voltage range		85%~110%
		额定电压Rated voltage	V	DC220/AC220
		额定功率Rated power	W	720
2	储能时间（额定电压）Storage time (at rated voltage)		s	≤20
3	分闸线圈额定电压/电流 Rated voltage / current of opening coil		V/A	DC110V/4A、DC220V/2A AC220V/5A
4	辅助开关 Auxiliary switch	额定电流Rated current	A	3(DC220V/5(DC110V)
		数量：常开/常闭Number of auxiliary contacts: Normally opened / Normally closed	Pair	11/11
5	行程开关 Trip switch	额定电流Rated current	A	3(DC220V)/5(DC110V)
		数量：常开/常闭Number of auxiliary contacts: Normally opened / normally closed	Pair	2/2
6	接线端子能通过的持续电流Capacity of terminal carry continuous current		A	10
7	加热器及照明回路电压Voltage of heater and lighting circuit		V	AC220
8	机械寿命Mechanical endurance		Times	10000

3) 产品的机械调整参数表Table of product mechanical adjustment parameters

序号 Serial No.	名称 Name	单位 Unit	数据 Data
1	断路器极间中心距Clearance between poles	mm	1200/1000 (onhandcart type)
2	开断时间Breaking time		≤50
3	合—分时间Close-open time		≥70 (when running)
4	分—合时间Open-close time	ms	300及以上可调
5	三相分闸不同期性Non-simultaneity of three-phase opening		≤2
6	三相合闸不同期性Non-simultaneity of three-phase closing		≤3

■ 订货须知Order notice

- 断路器的型号、规格；
- 额定电气参数（电压、电流、开断电流等）；
- 使用环境条件（环境温度、海拔高度、环境污秽等级）；
- 额定控制回路电气参数（储能电机额定电压、分、合闸线圈额定电压）；
- 需要的备品备件及专用设备、工具的名称和数量（需另行订货）；
- 一次上端子的接线方向。
- Model and format of the circuit breaker;
- Rated electrical parameters (voltage, current, breaking current, etc).
- Environmental conditions for using (environment temperature, altitude, and environment pollution level).
- Rated control circuit electrical parameters (power-storage electromotor rated voltage and brake separating and closing cable coil rated voltage);
- Names and quantities of spare items needed, parts and special equipment and tools (to be otherwise ordered).
- The wire connecting direction of the primary upper terminal.

LW36-40.5 高压六氟化硫断路器

LW36-40.5 High Voltage SF_6 circuit breaker

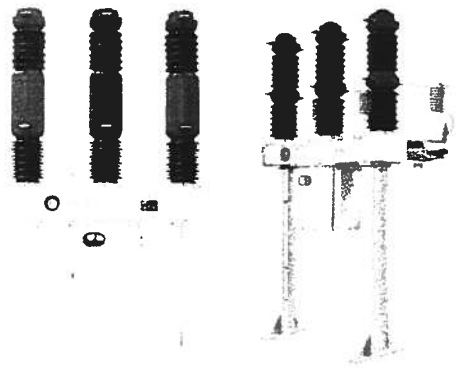

产品简介Product introduction

LW36-40.5型自能式高压交流六氟化硫断路器为户外三相高压交流设备，适用于海拔不超过3000m，环境温度不低于-40℃，污秽等级不高于IV级地区的交流50Hz，最高电压为40.5kV的电网中，适合发电厂、变电站、工矿企业高压输变线路的控制和保护，也可作为联络断路器使用。

LW36-40.5 outdoor self-energy HV AC SF_6 circuit breaker is an outdoor three-phase HV AC equipment used in electricity grids with altitudes of no more than 3000m, environment temperatures of no less than -40℃, local pollution classes of no higher than Class IV, and AC 50Hz with maximum voltage of 40.5kV. It is suitable for the control and protection of HV supply and transformation lines in power station, converting stations, and industrial and mining enter-prises. It can also be used as a connection circuit breaker.

结构特点Structural characteristic

LW36-40.5型自能式高压六氟化硫断路器采用先进的热膨胀加辅助压气自能灭弧技术，配用新型弹簧操动机构，具有电寿命长、操作功小、电气及机械可靠性高、技术参数高、价格适中等特点，是目前40.5kV电网的首选产品。其性能特点如下：

◇ 额定技术参数高：额定电流2500A/4000A，额定短路开断电流31.5kA/40kA，适用于大容量电网的开合。

LW36-40.5 self-energy HV SF_6 circuit breaker is equipped with advanced hot-expansion plus auxiliary pressure gas self-energy arc extinguishing technology and matched with new-type spring actuating mechanism. It has features such as long electrical endurance, small operating power, high electrical and mechanical reliability, high technical parameters, and moderate price. It is the first choice product for current 40.5kV electricity grids. Its main perfor-mance features are as follows:

High rated technical parameters: rated current 2500A/4000A and rated short circuit breaking current 31.5kA/40kA suitable for the opening and closing of large-capacity electricity grids.

◇ 电气可靠性高：

(1) LW36-40.5(W)T2500-31.5H以及LW36-40.5(W)T2500-31.5电气寿命31.5kA×21（25kA×31）次，LW36-40.5(W)T4000-40电气寿命为40KA×20次，可满足运行25年不更换灭弧室零件的要求。

(2) 开合电容器组电流630A(44193KVAr)，T4000-40为800A无重燃，切合电缆电流50A无重击穿，适用于切合容性负载和感性负载的工况。

(3) 外绝缘能力强，适用于海拔3000m或IV级污秽地区。

◇ High electrical reliability:

(1) The electrical endurance of LW36-40.5(W)T2500-31.5H and LW36-40.5(W)T2500-31.5 circuit breaker is 31.5kA×21times (25kA×31times). LW36-40.5(W)T4000-40 electrical endurance is 40KA×20 times, can meet the requirement of running for 25 years without replacing the arc extinguishing chamber components.

(2) No restrike when opening-closing capacitor group current is 630A (44193kVAr) and T4000-40 current is 800A and no heavy arcing at composite cable current 50A; suitable for working conditions of composite capacity load and inductive load.

(3) Strong external insulation ability; suitable for regions with 3000m of altitude or Class IV pollution.

◇ 操动机构可靠性高：

(1) 机械寿命分合10000次不换零件，可满足用户连续运行，减少维护的要求。

(2) 新型弹簧操动机构零部件数量少，采用整体高强度铸铝机架，分合闸弹簧、缓冲器采用集中布置的方式，结构紧凑，操作可靠，噪声小，维护方便，适用于频繁操作。

(3) 主要二次电器元件均选用国内外最先进可靠的相应产品。

◇ High reliability of operating mechanism:

(1) Mechanical endu rance: separating and closing for 10000 times without replacing parts, can meet the user's requirement of continuous running and little maintenance.

(2) New type spring actuating mechanism has few components parts; overall high-strength cast aluminum frame and brake separating and closing spring; and centralized arrangement is adopted for the buffer; compact structure, reliable opera-tion, low noise, and convenient maintenance; suitable for frequent operations.

(3) Major electrical units in secondary circuits are most advanced and reliable domestic and foreign products.

◇ 所有的外露件采用不锈钢材料或表面进行热镀锌，防腐性能高。

◇ 可靠的密封结构，保证了产品的年泄漏率≤0.5%。

◇ LW36-40.5(W)T2500-31.5断路器可内附或外附互感器，LW36-40.5(W)T2500-31.5H，LW36-40.5(W)T4000-40只可外附电流互感器。

◇ All exposed parts are made of stainless steel materials or hot-galvanized on the surface for high corrosion resistance.

◇ Reliable sealing structure ensures the product annual leakage rates≤0.5%.

◇ Mutual inductors can be internally or externally attached to the LW36-40.5(W)T2500-31.5 circuit breaker, but mutual inductors only can be externally attached to the LW36-40.5(W)T2500-31.5H and LW36-40.5(W)T4000-40 circuit breaker.

断路器每相可装4只内附电流互感器，内附电流互感器铁芯采用微晶合金及高导磁材料，200A及以下电流互感器的精度可达到0.2级、0.2S级。内附电流互感器线圈及引线采用可靠的电气屏蔽设计，改善了互感器的电场分布，提高了产品内绝缘水平，可承受120kV、5min的工频耐压试验。具内绝缘不发短路开断工况的干扰，十分安全可靠。

少数小容量电站，当互感器一次电流小于200A，精度又不能低于0.2级时，可选用外置互感器的结构（附客户断路器一例）

LW36-40.5型六氟化硫断路器的产品功能参数和使用可靠性比国内现有同类型产品有了突破性的进步，被全国许多电力行业和高校的专家、教授们誉为"具有国内外同类产品国际先进水平"的好产品。

Kawara Trade S.A

Four internally attached current mutual inductors for every phase can be installed on the circuit breaker. Microcrystal alloy and high permeability material are adopted for internally attached current mutual inductors. The accuracy of 200A and above current mutual inductors can reach up to Level 0.2 or 0.2S. Reliable electrical screening design is adopted for the cable coils of internally attached current mutual inductors to improve the electric field distribution of the mutual inductors and promote the internal insulation of the product. It can withstand 120kV and 5min working frequency withstand voltage test, and the internal insulation is not interfered by the short circuit breaking working conditions, which makes it safe and reliable.

For a few small-capacity electric stations, when the primary current of the mutual inductor is less than 200A but the accuracy cannot be lower than Level 0.2, external mutual inductor structures (mounted on one side of the circuit breaker) can be an option.

The functional parameters and service reliability of LW36-40.5 sulfur hexafluoride circuit breaker represent a revolutionary progress in comparison with those of similar products in the country. It is extolled by many experts and professors in the electricity industry and universities throughout the country as a good product "with advanced international level in similar products both home and abroad."

主要技术参数Main technical parameters

1) 断路器主要技术参数表Table of main parameters of the circuit breaker

序号 Serial No.	名称 Name			单位 Unit	LW36-40.5W/T2500-31.5W	LW36-40.5W/T2500-31.5	LW36-40.5W/T4000-40	LW36-40.5W/T4000-50
1	额定电压Rated voltage				40.5	40.5	40.5	40.5
7	额定绝缘水平 Rated insulation level	1min工频电压 1min power frequency withstand voltage	对地 / 相间 To earth / phase to phase	kv	K.95	K.95	K.95	K*95
			开关断口 Across switching device		118	118	118	118
		雷电冲击耐压 Lightning impulse withstand voltage	对地 / 相间 To earth / phase to phase		K.185	K.185	K.185	K*185
			开关断口 Across switching device		215	215	215	215
3	额定频率Rated frequency			Hz	50	50	50	50
4	额定电流Rated current			A	2500	2500	4000	4000
5	额定短路开断电流Rated short circuit breaking current			kA	31.5	31.5	40	50
6	额定短路关合电流（峰值）Rated short - circuit making current (peak)				80	80	100	125
7	额定短时耐受电流Rated short time withstand current				31.5	31.5	40	40
8	额定短路持续时间Rated duration of short - circuit			s	4	4	4	4
9	额定峰值耐受电流Rated peak withstand current (peak value)			kA	80	80	100	125
10	额定操作顺序Rated operating sequence				O-0.3s-CO-180s-CO			
11	额定单个电容器组开断电流Rated single capacitor bank breaking current			A	630	630	800	2000
12	额定电缆充电开断电流Rated line charging breaking current				50	50	50	50
13	额定失步开断电流Rated out-of-phase breaking current			kA	8	8	10	12.5
14	异相接地故障开断电流Rated double earth breaking current				27.4	27.4	36	43.5
15	机械寿命Mechanical endurance			Times	10000	10000	10000	10000
16	额定短路开断电流的开断次数Number of rated short-circuit breaking current				20	20	20	20
17	额定六氟化硫气体压力（20℃表压）Rated SF_6 gas pressure (20℃ gauge pressure)			MPa	0.45	0.50	0.50	0.5
18	SF_6气体功能压力 SF_6 gas function pressure (gauge pressure, 20℃)	报警压力 Alarm pressure			0.40	0.47	0.47	0.4
		最低功能压力Minimum functional pressure			0.35	0.45	0.45	0.35
19	SF_6气体年漏气率Annual leakage of SF_6 Gas			%	≤0.5	≤0.5	≤0.5	≤0.5
20	气体水分含量（L/L）（20℃ 交货时）Gas humidity content (L/L20℃ at handover)			L/L	≤150×10⁻⁶			

注：K为海拔修正系数，海拔2000m，K=1.13；海拔3000m，K=1.28.

Notes: external insulation is corrected by altitude correction coefficient K, altitude 2000m, K=1.13; altitude 3000m, K=1.28

2) 机构主要技术参数表Table of major technical parameters of the mechanism

序号 Serial No.	名称 Name		单位 Unit	数据 Data
1	储能电动机 Energy-store motor	额定电压Rated voltage	V	DC220/AC220
		额定输出功率Rated output power	W	500
2	储能时间(额定电压) Storage time (at rated voltage)		s	20
3	手动储能力矩Manual power storage moment		N · m	≤60
4	分闸线圈额定电压/电流Rated voltage / current of opening coil		V/A	DC220/1.6
5	合闸线圈额定电压/电流Rated voltage / current of closing coil			DC220/1.4
6	辅助开关 Auxiliary switch	额定电压Rated voltage	V	DC220/AC220/DC110
		额定电流Rated current	A	3/10/5
		接点数：常开/常闭Number of contacts: Normally open / closed	Pair	11/11
7	行程开关 Trip switch	额定电压Rated voltage	V	DC220/AC220/DC110
		额定电流Rated current	A	3/10/5
		接点数：常开/常闭Number of contacts: Normally open / closed	Pair	2/2
8	母线端子能通过的持续电流Capacity of terminal carry continuous current		A	10
9	加热器及照明回路电压Voltage of heater and lighting circuit		V	AC220
10	机械寿命Mechanical endurance		Times	10000
11	辅助回路1min工频耐受电压1 min power frequency withstand voltage of auxiliary circuit		V	2000

3) 产品的机械调整参数表Table of parameters for the mechanical adjustment of the product

序号 Serial No.	名称 Name	单位 Unit	数据 Data
1	断路器极间中心距Clearance between poles	mm	440
2	三极分闸同期性Simultaneity of three-phase opening	ms	≤2
3	三极合闸同期性Simultaneity of three-phase closing		≤3
4	主回路电阻Resistance of main contact	μΩ	≤60(≤40 无CT，without CT)
5	合—分时间(金属短接时间)Close-open time (Close-open time)		≤70(when running)
6	分—合时间(自动重合闸时间)Open-close time (Automatic reclosing time)	ms	300及以上可调
7	开断时间Breaking time		≤65

Kawara Trade 2 A

ZW39-40.5 高压真空断路器

ZW39-40.5 High voltage vacuum circuit breaker

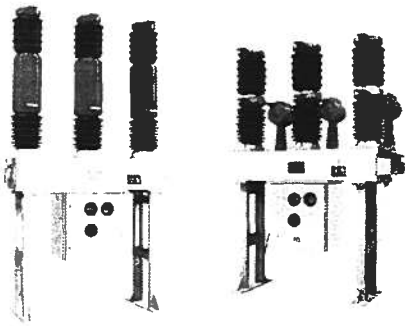

产品简介Product introduction

ZW39-40.5型真空断路器为户外型产品，适用于交流50Hz、40.5 kV三相电力系统中，用以切断额定电流、故障电流或转换线路，实现对电力系统的控制和保护。该产品可进行频繁操作，也可作为联络断路器使用。

ZW39-40.5 vacuum circuit breaker is applicable in the 50Hz,40.5kV three-phase electrical system and it is used for breaking rated current, failure current or switching lines and realize the control and protection of electrical system.This product can be frequently operated and can also be used as a connection breaker.

结构特点Structural characteristic

ZW39-40.5(W)/T2000（2500）-31.5型户外真空断路器解决了一直以来国内同类产品因温度变化内部会产生凝露、吸潮、使绝缘强度降低的一大难题及ZW7型户外产品因绝缘拉杆外露易老化的问题，加强了套管内表面及绝缘件的绝缘强度。除此以外，该断路器还有如下特点：

ZW39-40.5(W)/T2500-31.5 out door vacuum circuit breaker has solved the major problem of domestic products of similar types, that is due to temperature changes the internals of the breaker will generate condensation, moisture absorption that lead to the reduction of insulation strength. It has also solved the problem that the insulation pole may easily age due to its exposure outside, strengthened the insulation strength the internal surface of the bushings and insulating parts. In addition, this circuit breaker also has the following characteristics.

优选真空灭弧室触头材料，使小电流开断截流值平均在4A以下，有效抑制了操作过电压。

断路器开断能力强，开断短路电流31.5kA达30次、

采用性能可靠的CT10A改进型机构，能频繁操作，寿命达10000次。CT10A改进型机构的主要特点（与原CT10A机构进行比较）

(1) 零部件数量减少，采用双半轴结构，可靠性提高。

(2) 三关板结构，储能部分和分合闸操作部分分开，稳定性好。

(3) 合闸电磁铁由下部改设计到机构上部，更换、维护方便。

(4) 全部采用菲尼克斯接线端子。

该产品能适应海拔3000米的环境要求，外绝缘水平高，断口内绝缘水平达118kV。

断路器中可内附或外附互感器：

断路器每相可装4只内附电流互感器，内附电流互感器铁芯采用微晶合金及高导磁材料，200A及以上电流互感器的精度可达到0.2级、0.2S级。断路器整体结构紧凑，同时对互感器二次绕组的包扎工艺进行了充分的优化，充分保证互感器线圈外形规则，无毛边，且在烘干时不松动，装入主机后无变形，做到电场均匀。

断路器内附CT结构紧凑，但由于断路器内部空间有限，在小电流（如100A及以下时）不能保证较高的精度（如0.2或0.2S）、且负载小。另外内附电流互感器维护、增容更换时没有外附互感器方便。

该产品在真空灭弧室与瓷套间充有微正压的SF_6气体（无内附CT：0.02MPa、内附CT：0.2MPa），确保内部不会产生凝露及吸潮现象，同时可避免原ZW7系列产品内部填充有机绝缘材料易造成气泡、贯穿性放电、维护、维修困难等缺陷。

主要二次电器元件均选用进口或合资产品，运行可靠性高。

产品外露部件表面处理均为热镀锌或直接采用优质不锈钢板材，耐腐蚀性能优越。

该产品能直接替代SW2-35型少油断路器（安装尺寸相同），配过渡支架可替代各种型号的多油断路器，是较为理想的无油化断路器。

The optimized choice of vacuum interrupter contact materials keeps the breaking interception value under 4A on average, effectively inhibiting operation overvoltage

The circuit breaker has strong breaking capacity and the breaking short-circuit current 31.5kV can reach 30 times

It adopts the enhanced highly reliable mechanism of CT10A and can be operated repeatedly, with a life time of more than 10000 times. The major features of enhanced mechanism of CT10A(in comparison with the original CT10-A mechanism))

(1) The number of parts is reduced, and it adopts the structure of double half shaft featuring high reliability.

(2) It adopts triple sandwiched structure and the energy storage part and the switch opening and closing parts are separated, featur-ing good stability.

(3) The design of the closing magnet is changed from the lowerpart to the upper part, which facilitates replacement and maintenance.

(4) All the terminals are Phoenix ones.

This product can meet the environment requirements for a sea level of up to 3000m; with a high insulation level. The insulation level at broken sections reaches 118kV.

The circuit breaker may have internally or externally attached transformers. Four internally attached transformers can be attached to each phase of the circuit beaker and the iron core of the internally attached transformer adopts microcrystal alloy and magnetic material with high conductivity, and the electrical transformers above 200A can reach Grade 0.2 or Grade 0.2S. The integrated structure of the circuit breaker is compact, and the binding techniques for the secondary windings of transformers have been fully optimized, which fully ensures that after binding the coils of the transformer has regular shape, free of burrs, and they will not become loosen at baking and not deformed after they are installed into the main unit, thus ensuring even electrical field.

The internally attached CT of the circuit breaker is compact, but due to the limited space inside the circuit breaker it cannot realize very high accuracies (for example 0.2 or 0.2S.) at small currents (such as those below 100A), and it also has small load.In addition, the maintenance, capacity increase and replacement of internally attached current transformer is not convenient compared with those of the externally attached transformer.

C In the space between the vacuum interrupter and the ceramic sleeve of this product is filled with SF_6 gas (without internally attached CT: 0.02MPa, with internally attached CT: 0.2Mpa), ensuring that no internal condensation and moisture absorption will occur, and it can also avoid sych defects of the original ZW7 serial products as that the internally filled insulation materials may easily lead to air bubbles, penetrating discharge and difficulties in maintenance and repairs.

Imported products or products made by joint venture manufacturers were adopted for major secondary electric components, so they feature high reliability.

The surface treatments for the exposed parts of this product were all hot dip galvanized or directly use high quality stainless steel plates, which feature excellent corrosion resistance

This product can directly substitute SW2-35 oil-minimum breaker (with the same installation dimensions), and when provided with transition support it can replace all types of oil-maximum breakers, so it is a rather ideal oilless breaker

主要技术参数Main technical parameters

1) 断路器主要技术参数表Table of main parameters of the circuit breaker

序号 Serial No.	名称 Name		单位 Unit	数据 Data
1	额定电压Rated voltage		kV	40.5
2	1min工频耐受电压1 min power frequency withstand voltage			118/95*(dry)
	对地 / 相间 To earth / phase to phase	开关断口 Across switching device		85*(wet)
3	额定雷电冲击耐受压（峰值）Rated lightning impulse withstand voltage			215/185*
	对地 / 相间 To earth / phase to phase	开关断口 Across switching device		
4	额定电流Rated current		A	2000/2500
5	额定短路开断电流Rated short-circuit breaking current		kA	31.5
6	额定短时耐受电流Rated short-time withstand current			31.5
7	额定短路持续时间Rated duration of short-circuit		S	4
8	额定短路关合电流（峰值）Rated short-circuit making current (peak)		kA	80
9	额定峰值耐受电流Rated peak withstand current			80
10	额定短路开断电流开断次数Number of rated short-circuit breaking current		Times	30
11	额定失步开断电流Rated out-of-phase breaking current		kA	8
12	经相接地故障开断电流Double earth grounding failure breaking current			27.4
13	额定操作顺序Rated operating sequence			O-0.3s-CO-180s-CO
14	机械寿命Mechanical endurance		Times	10000
15	弹簧储能电机额定电压Rated voltage of spring energy-store motor		V	AC220, DC220, DC110
16	额定操作电压/电流 Rated operation voltage	分闸线圈Opening coil	V/A	DC220/1.6 or DC110/3.4
		合闸线圈Close coil		DC220/1.8 or DC110/2.3
17	真空灭弧室（TD-40.5/2000-31.5W）的真空度 Vacuum arc chamber, with a vacuum degree of (TD-40.5/2000-31.5W)	新出厂的灭弧室 Interceptors recently out of the factory	Pa	$<1.33\times10^{-1}$
		20年储存期内 During the 20-year storage period		$<6.6\times10^{-2}$
18	断路器的重量Weight of one set of CB		kg	750 (without CT) 1000 (with CT)
19	额定六氟化硫气体压力（20℃）Rated gas pressure of SF_6		MPa	0.02 (without CT) /0.2 (with CT)
20	SF_6气体补气报警压力（20℃）SF_6 gas refilling warning pressure (20℃)			0.15(with CT)
21	SF_6气体水分含量（L/L）（20℃ 交货时）Water humidity of SF_6 gas L/L (20℃, at time of transfer)			$\leq 250\times10^{-6}$(with CT)
22	年漏气率Annual leakage of SF_6 gas		%	≤0.5
23	爬电距离 Creepage distance	开关断口 Across switching device	mm	>1255
		对地 / 相间 To earth / phase to phase		>1255

注：带*值为产品的外绝缘水平，试验时海拔海拔3000米修正，三值分别为122kV、109kV、237kV。
Note: Values marked with * are the outer insulation levels and they were corrected for a sea level of 3000m, with the three values being 122kV, 109kV and 237kV respectively

订货须知Order notice

- 断路器型号、规格；
- 额定电气参数（电压、电流、开断电流等）；
- 使用环境条件（环境温度、海拔高度、环境污秽等级）；
- 操动机构操作电压及电机电压；
- 内附或外附电流互感器的数量、电流比、级次组合、二次负荷；
- 备品、备件及专用工具，设备的名称和数量（需另行订货）。

- Types and specifications of circuit breakers;
- Rated electrical parameters (voltage, current and breaking current, etc.)
- Ambient conditions (ambient temperatures, sea levels and grades of environmental pollution level);
- Operating voltage and motor voltage of operating mechanism;
- Number, current ratios, scale order combination and secondary load of internally or externally attached transformers.
- Spare parts and specialized tools, names and quantity of equipment (need to be ordered separately).

第三篇 隔离开关

Chapter 3: Disconnect switch

如高牌隔离开关产品的资质

Qualifications for Rugao disconnect switches

考核证书

型式试验报告
Type Test Reports

GW4A系列户外高压交流隔离开关GW4A outdoor HV AC disconnect switch

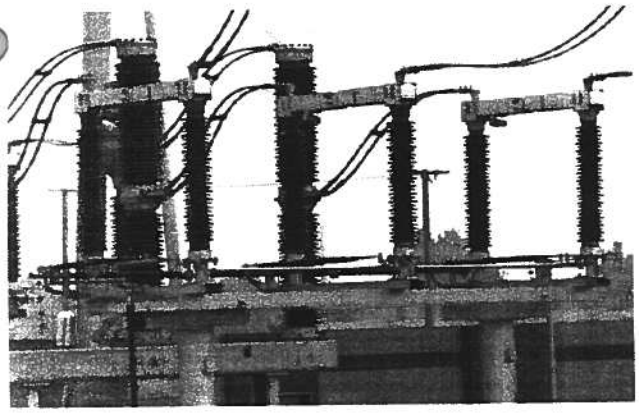

概 述 Overview

GW4A－40.5、72.5、126、145、170D(W)型隔离开关系三相交流频率50Hz/60Hz的户外高压输电设备，用以在无负载情况下开断或接通高压线路，以便对高压线路进行换接，改变运行方式，以及对检修的母线与断路器等高压电器设备实行安全的电气隔离。

本产品为双柱水平断口中间开启式，可以一侧或两侧附装接地开关。隔离开关采用CS14G型或CS11型人力操动机构或CJ2型电动机操动机构进行三极联动操作；接地开关采用CS14G型人力操动机构进行三极联动操作。

本产品符合GB1985《高压交流隔离开关和接地开关》、DL/T486《高压交流隔离开关和接地开关》、GB/T11022、DL/T593《高压开关设备和控制设备标准的共用技术要求》等标准，并且满足国家电网公司为完善化而颁布的《关于高压隔离开关订货的有关规定》。

本产品于2005年8月通过江苏省电力公司完善化技术审查。

GW4A-40.5/72.5/126/145/170D(W) disconnect switches are kinds of outdoor HV electricity transmission equipments at three-phase AC frequency of 50Hz/60Hz. It is used for breaking or connecting HV lines under no loads so that the power lines can be changed and connected and the way the electricity runs is changed. In addition, it can be used to exercise safe electrical insulation for such HV electric apparatuses as bus and breaker.

This product has two insulators with horizontal center breaks. It is operable in the middle and accessible to the grounding switch on one side or two sides. The disconnect switch adopts CS14G or CS11 manual operating mechanism or CJ2 motor-based operating mechanism to realize the tri-pole linkage. The earthing switch adopts CS14G manual operating mechanism to realise tri-pole linkage.

This product conforms to GB1985 "HV AC disconnect switch and earthing switch", DL/T486"HV AC disconnect switch and earthing switch", GB/T11022 and DL/T593 "General technical requirements on HV switches and control equipments" and satisfies the "Regulations on Ordering HV disconnect switch" that has been promulgated by the State Grid Corporation of China for perfecting the supervision.

In August 2005, this product passed the improvement technology review by State Grid Corporation (Jiangsu provincial branch).

结构简述 Structural overview

GW4A系列隔离开关由三个单极及操动机构组成。每个单极由底座、支柱绝缘子及导电部分构成。一个长条底座两端安装可旋转的绝缘支柱，导电闸刀的触指臂和触头臂分别固定在绝缘支柱顶端。

操动机构驱动一端绝缘支柱旋转，并通过交叉连杆带动另一端绝缘支柱反向旋转90°，使导电闸刀在水平面上回转，实现隔离开关分、合闸。分闸状态形成水平绝缘断口。

GW4A disconnect switch comprises three single poles and operating mechanism. Each pole comprises a base, post insulators and conductive parts. Revolvable insulating posts are mounted at both sides of a long base. The conductive switch blade's contact arms are respectively fixed at the tops of the insulating posts. When the insulating post at one end of the actuator revolves to drive, with the help of the cross-over lever, the reverse rotation of the insulating post at the other end by 90°, the conductive switch blade will rotate on the horizontal surface to realize the starting and closing of the isolating switch. A horizontal insulating open break will appear at the opening moment.

主要特点 Main characteristics

① 导电臂采用矩形铝合金管制成，强度高、质量轻、散热面积大、防腐性能好。

② 采用特殊铜合金制成自力型触指，依靠触指自身的弹力夹紧触头，取消了触指弹簧，杜绝因弹簧锈蚀、分流发热退火而引起的触头夹紧力降低，接触电阻增加，触头发热加剧的恶性循环。触头采用铜板弯成，与导电臂联结面积大、分合过程中触头与触指摩擦行程短，操作力小。此导电部分结构已获得国家实用新型专利（专利号：ZL03 2 20022.6）。

① The conductive arm made of rectangular Al-alloy pipes is characterized by high strength, light weight, large radiation area and corruption-resistance.

② Adopt particular copper alloy to develop the self-contained contact. The contact point is tightened by the elastic force of the contact itself. The contact spring is eliminated to avoid possible drop of the contact in gripping force due to the spring's corrosion and shunting, heating and annealing, possible increment in contact resistance, and possible vicious cycle of the growing heat of the contact. The contact is made of curved copper plate, forming a large connection area with the conductive arm. In the opening and closing processes, there is a short trip of friction between the contact and the finger and the required operating force is small. The conductive part has been acknowledged by the Chinese competent authority as a new and practical patent.(Patent No. Z003 2 20022.6)

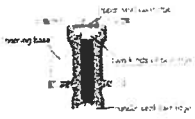

③ 隔离开关转动部分按免维护的要求设计，转动座设计成密封结构，水气、尘埃、有害气体无法进入，使轴承内二号低温润滑脂不流失、不固化；轴承座内部套有推力球轴承和向心球轴承，将隔离开关的重力及水平分力由这两种专用轴承承担，使隔离开关长期运行后的操作力矩不会增加。

③ The rotating parts of the disconnect switch are designed to be free of any maintenance. The rotating base is designed into a seal structure which denies the access of moisture, dust and harmful gases so that No 2 low-temperature lubricating cream within the bearing will not run off or harden. Within the bearing base are thrust ball bearing and radial ball bearing, both of which will share the gravity and horizontal component of the disconnect switch so that the operating torque will not increase after the long-term operation of the disconnect switch.

主要技术参数 Key technical parameters

项目 Item		单位 unit	参数 parameters				
额定电压Rated voltage		kV	40.5	72.5	126	145	170
额定短时工频耐受电压 Rated short-time power frequency withstand voltage	a）1min工频耐受电压（有效值）Rated Power Frequency Withstand Voltage(1min) 对地/相间 To earth / phase to phase	kV	121.6	160	230	275	325
	a）1min工频耐受电压（有效值）Rated Power Frequency Withstand Voltage(1min) 开关断口 Across switching device	kV	151.04	200	230+70	275+85	375
额定雷电冲击耐受电压 Rated Lightening impulse withstand voltage	b）额定雷电冲击耐受电压（峰值）Rated Lightening impulse withstand voltage 对地/相间 To earth / phase to phase	kV	236.8	350	550	650	750
	b）额定雷电冲击耐受电压（峰值）Rated Lightening impulse withstand voltage 开关断口 Across switching device	kV	275.2	410	550+100	650+120	860
额定频率Rated Frequency		Hz	50/60				
额定电流Rated Current		A	1250,2000,2500 3150,4000	1250,1600, 2000,2500, 3150,4000	1600,2000, 2500,3150, 4000	1600,2000, 2500,3150, 4000	2000
额定短时耐受电流Rated short-time withstand current		KA	31.5,40,50	40,50	40,50	40,50	40
额定峰值耐受电流Rated peak withstand current		KA	80,100,125	100,125	100,125	100,125	104
额定短路持续时间 Rated duration of short circuit	主刀/地刀 Primary switch/earthing switch	s	4/4	4/4	3/3	3/3	3/3
额定端子机械负荷 Rated Terminal mechanical load	水平纵向 Horizontal-longitudinal	N	750	750	1250	1250	1250
	水平横向 Horizontal-vertical	N	500	500	750	750	750
	垂直力 Vertical force	N	750	750	1000	1000	1000
爬电距离Creepage distance		mm	1013 1256	1813 2248	3150 3906	3625 4495	4250 5270
机械寿命Mechanical endurance		次 Times	5000	5000	10000	5000	5000
电动机操动机构 Motor operating mechanism	型号Model		CJ2	CJ2	CJ2	CJ2	CJ2
	电机电压Motor voltag	V	AC380、DC220、DC110				
	控制回路电压 Control circuit's voltage	V	AC380、AC220、DC220、DC110				
	分、合闸时间 Opening time and closing time	s	7 ≤ 1				
人力操动机构 Manual operating mechanism	型号Model		CS14G				
	电磁锁电压 Electromagnetic lock's voltage	V	AC220、DC220、DC110				

订货须知Notice on ordering goods

订货时须说明产品型号、额定电压、额定电流、额定短时耐受电流、爬电比距等。

隔离开关附装接地开关的方式（不接地、左接地、右接地、双接地），左右接地若不注明时按右接地供货。

注：左右接地判别方法：将两手臂向前伸，与隔离开关打开方向一致，则接地开关在左手侧为左接地，在右手侧为右接地。

操动机构型号、名称、电源电压及辅助开关接点数。

说明操动机构上配用的电磁锁适用何种电源及电压等级。

Product model, rated voltage, rated current, rated short-time withstand current and creepage distance must be specified at the goods-ordering time

The disconnect switch offers several options of grounding (no, left, right, both left and right). Unless otherwise specified, the goods supplied will be considered as providing the option of right grounding.

Notes: 1. The methods of judging left and right grounding: hold out both arms and keep the arms in the same direction as the disconnect switch is opened. The earthing switch will be considered as left grounding if on the left hand side, and right grounding if on the right hand side.

The actuator's model and name, voltage and the number of contacts for auxiliary switch

Specify the type of power and voltage degree for the electromagnetic lock of the actuator

GW4C系列户外高压交流隔离开关GW4C outdoor HV AC disconnect switch

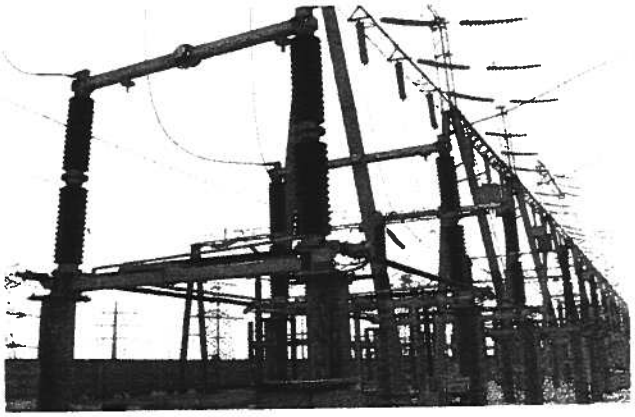

概 述 Overview

GW4C系列隔离开关系三相交流频率50Hz/60Hz的户外高压输电设备，用以在无负荷情况下断开或接通高压线路，以使对高压线路进行换接，改变运行方式，以及对检修的母线与断路器等高压电器设备实行安全的电气隔离，也可分合一定数值的电感/电容小电流，并具有开合母线转换电流的能力。

本产品为双柱水平断口中间开启式，可以一侧或两侧附装接地开关。隔离开关采用CJ2或SRCJ2型电动机操动机构三相联动操作；接地开关采用CS14G或SRCS型人力操动机构三极联动操作。

本产品符合GB1985《高压交流隔离开关和接地开关》、GB11022、DL/T593《高压开关设备和控制设备标准的共用技术要求》、DL/T486《高压交流隔离开关和接地开关》等标准，并且满足国家电网公司为完善化而颁布的《关于高压隔离开关订货的有关规定》。通过全套型式试验并且通过9度烈度的耐地震计算分析。

本产品通过国家鉴定，鉴定认为"在产品设计上具有特点，产品性能达到国际同类产品的先进水平"。

GW4C disconnect switch is a kind of outdoor HV electricity transmission equipments at three-phase AC frequency of 50Hz/60Hz. It is used for breaking or connecting HV lines under no loads so that these lines can be changed and connected and the way the electricity runs is changed. In addition, it can be used to exercise safe electrical insulation for such HV electric apparatuses as bus and breaker. The switch can open and close inductance/capacitance current and is able to open and close the bus to switch current.

This product has two insulators with horizontal center breaks. It is openable in the middle and accessable to the grounding switch on one side or two sides. The disconnect switch adopts CS14G or CS11 manual operating mechanism or CJ2 motor-based operating mechanism to realize the tri-pole linkage. The earthing switch adopts CS14G manual operating mechanism to actualize tri-pole linkage

This product conforms to GB1985 "HV AC disconnect switch and grounding switch",GB/T11022 and DL/T593 "General technical requirements on HV switches and control equipments" DL/T486 "HV AC disconnect switch and earthing switch", and satisfies the "Regulations on Ordering HV disconnect switch" that has been promulgated by the State Grid Corporation of China for perfecting the supervision. The product passes the whole set of tests and the anti-seismic (intensity level. 9) calculation analysis.

This product has been verified by the Chinese competent authority as having uniqueness in design and reaching international advanced level of similar products.

结构简述Structural overview

GW4C系列隔离开关由三个单极及操动机构组成。每个单极由底座、支柱绝缘子及导电部分构成。一个长条底座两端安装可旋转的绝缘支柱，导电闸刀的触指臂和触头臂分别固定在绝缘支柱顶端。

操动机构驱动一端绝缘支柱旋转，并通过交叉连杆带动另一端绝缘支柱反向旋转90°，使导电闸刀在水平面上回转，实现隔离开关分、合闸。分闸状态形成水平绝缘断口。

GW4C disconnect switch comprises three single poles and operating mechanism. Each single pole is made of a base, post insulator and conductive part. Revolving insulating posts are mounted at both sides of a long base. The conductive switch blade's contact arms are respectively fixed at the tops of the insulating posts.

When the insulating post at one end of the actuator revolves to drive, and through the cross-over lever, brings the insulating post at the other end to rotate reversely by 90° to make the conductive switch blade circumgyrate. In this way, the isolating switch is opened and closed.

主要特点Main characteristics

① 导电臂采用矩形铝合金制成，强度高、质量轻、散热面积大，防腐性能好。

The conductive arm made of rectangular Al-alloy pipes is characterized by high strength, light weight, large radiation area and strong resistance against corruption.

② U形触指的一端直接固定在导电臂上，形成固定接触，导电可靠。另一端通过外置式弹簧及触指自身弹力对触头产生接触压力，短路电流通过时自动增加夹紧力。触指弹簧为不锈钢材质并有绝缘隔垫，弹簧不锈蚀不分流。

One end of the U-shaped contact is directly fixed on the conductive arm, forming fixed contact to ensure the reliability in conductance. The other end will produce contact pressure on the contact point with the spring force of external spring and contact. When the short circuit passes through, the gripping force will automatically increase. The contact spring is made of stainless steel and is equipped with insulating gasket. The spring will not corrupt nor shunt.

一端固定的U形触指
U-shaped contact finger fixed at one end

③ 触头采用铜板弯成，分合过程中触头与触指摩擦行程短，操作力小。

The contact is made of curved copper plate. In the opening and closing processes, there is a short trip of friction between the contact and the finger and the required operating force is small.

④ 隔离开关转动部位按免维护要求设计。转动座为全密封结构，水汽、尘埃、有害气体无法进入，轴承内润滑脂不流失、不固化。

The rotating parts of the disconnect switch are designed to be free of any maintenance. The rotating base is designed into a closure structure which denies the access of moisture, dust and harmful gases so that the low-temperature lubricating cream within the bearing will not run off or harden.

主要技术参数Key technical parameters

项目 Item		单位 unit	参数 parameters	
额定电压Rated voltage		kV	252	
额定绝缘水平Rated insulation level	1min工频耐受电压（有效值）Rated Power Frequency Withstand Voltage(1min)	对地/相间 To earth / phase to phase	460	
		开关断口 Across switching device	460(+145)	
	雷电冲击耐受电压（峰值）Rated Lightning impulse withstand voltage	对地/相间 To earth / phase to phase	1050	
		开关断口 Across switching device	1050(+200)	
额定频率Rated Frequency		Hz	50/60	
额定电流Rated Current		A	1600、2500、3150、4000	
额定短时耐受电流Rated short-time withstand current		kA	50	
额定峰值耐受电流Rated peak withstand current			125	
额定短路持续时间Rated duration of short circuit		s	3	3
额定端子机械负荷 Rated terminal mechanical load	水平纵向Horizontal-longitudinal	N	1000	1500
	水平横向Horizontal-lateral		750	1000
	垂直力Vertical force		1000	1250
隔离开关母线转换电流开合能力(3) Bus-transfer current switching capability of disconnectors			100V、1600A、100次	300V、1600A、100次
接地开关感应 Earthing switch induction 电流开合能力 Current opening/closing capacity	电磁感应电流（电流/电压）Electromagnetic induction -type current (current/voltage)	A/kV	100/6[a]（80/2）	160/15[a]（80/2）
	静电感应电流（电流/电压）Electrostatic induction -type current (current/voltage)	A/kV	5/6[a]（2/6）	10/15[a]（3/12）
	开合次数Times of opening and closing	次times	10	10
隔离开关小电流开合能力 Opening/closing capacity of disconnect switch	电容电流Capacitive current	A	2	1
	电感电流Inductive current	A	1	0.5
爬电距离Creepage distances		mm	3150/3906	6300/7812
无线电干扰电压RIV radio interference voltage		μV	≤500	≤500
机械寿命Mechanical endurance		次times	10000	10000
电动机操动机构 Motor operating mechanism	型号Model		CJ2	SRCJ2
	电机电压Motor voltage	V	AC380、DC220	AC380、DC220
	控制回路电压Control circuit's voltage	V	AC220、DC220	AC220、DC220
	分、合闸时间Opening time and closing time	s	7±1	16±1
	输出轴角Output shaft rotation		180°	180°
人力操动机构 Manual operating mechanism	型号Model		CS14G	SRCS
	控制回路电压Control circuit's voltage	V	AC220	AC220

注：(1)绝缘水平为DL/T593的最高级。本产品属高原地区，绝缘强度按海拔2000m考核，修正系数Ka1.13。

(2)参数为DL/T486-2010不锈钢材质规定值，括号内为GB1985-2014不锈钢材质规定值。

(3)正常情况下，只需对母线旁路母线的母线隔离开关、在短路时才需要开合母线转换电流，单母线、母联及变电站中大量线路隔离开关，不必要具有开合母线转换电流的性能。

Notes: (1) Insulating level is the highest for DL/T593. This product is designed for the plateau area. The result of the insulating test must prove its ability to work at the altitude of 2,000m. The correction coefficient Ka1.13.

(2) The parameters are the specifications for Type 6 of DL/T486-2010. The parameters included in the brackets are the specified values for Type 8 in GB1985-2014

(3) Under normal circumstances, only the disconnect switch for bi-bus and bypass bus will require the opening/closing bus to switch current at the moment of transfer switching. The single bus, busscouple and large quantities of disconnect switches at substations don't require the opening/closing bus to switch currents.

订货须知Notice on ordering goods

① 订货时请注明产品型号、额定电压、额定电流、额定短时耐受电流，爬电距离等。

② 隔离开关附装接地开关的方式（左接地、右接地、双接地），左右接地若不注明则按右接地供货。

注：左右接地判别方法：将两手臂向前伸，与隔离开关打开方向一致，则接地开关在左手侧为左接地，在右手侧为右接地。

③ 操动机构型号、名称、电机电压、控制电压及辅助开关接点数。

④ 当本隔离开关用于同塔双回路平行架空输电线路中变电站进出线端时，其附装的接地开关若需要开合感应电流，请特别说明，并且说明要求的参数及接地开关装在哪侧。（特别提示：并非变电站中所有接地开关和隔离开关附装的接地开关，都需要开合感应电流。）

① Product model, rated voltage, rated current, rated short-time withstand current and creepage distance must be specified at the goods-ordering time

② The disconnect switch offers several options of grounding (left, right, both left and right). Unless otherwise specified, the goods supplied will be considered as providing the option of right grounding.

Note: the methods of judging left and right grounding: hold out both arms and keep the arms in the same direction as the disconnect switch is opened. The earthing switch will be considered as left grounding if on the left hand side, and right grounding if on the right hand side

③ The operating mechanism, motor voltage, control voltage and the number of contacts for auxiliary switch

④ When the disconnect switch is used at the incoming and outgoing terminals of the substation in the double loop parallel overhead power transmission line, if the earthing switch requires the opening/closing induction current, then such requirement shall be specified. Besides, the parameters and the side at which the earthing switch is set shall be defined. (Special notice: Not all earthing switches attached to the earthing switches and disconnect switches at the substation shall require the opening/closing induction current.)

GW5A系列户外高压交流隔离开关GW5A outdoor HV AC disconnect switch

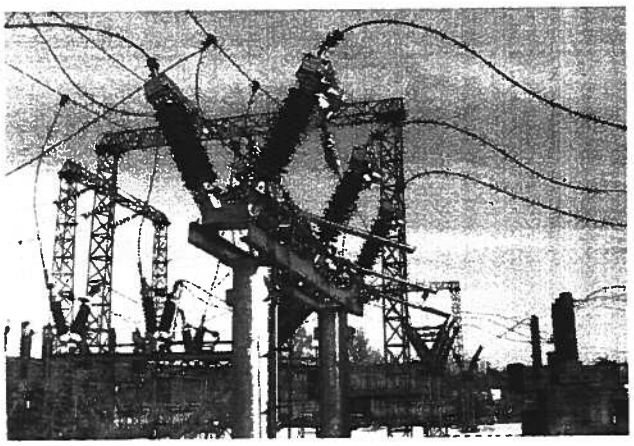

■ 概 述 Overview

GW5A系列隔离开关系三相交流频率50Hz/60Hz的户外高压输电设备，用以在无负荷情况下断开或接通高压线路，以便对高压线路进行换接，改变运行方式，以及对检修的母线与断路器等高压电器设备实行安全的电气隔离。

本产品为双柱水平断口中间开启式，可以一侧或两侧联接地开关。90°传动的隔离开关和接地开关采用CS11型人力操动机构进行三级联动操作，180°传动的隔离开关采用CJ2型电动机操动机构或CS14G型人力操动机构进行三级联动操作；接地开关采用CS11型人力操动机构进行三级联动操作。

本产品符合GB1985《高压交流隔离开关和接地开关》、GB/T11022、DL/T593《高压开关设备和控制设备标准的共用技术要求》、DL/T486《交流高压隔离开关和接地开关》等标准，并且满足国家电网公司为完善化而颁布的《关于高压隔离开关订货的有关规定》。

GW5A系列于2005年8月通过江苏省电力公司完善化技术审查。

GW5A disconnect switch is a kind of outdoor HV electricity transmission equipments at three-phase AC frequency of 50Hz/60Hz. It is used for breaking or connecting HV lines under no loads so that the power lines can be changed and connected and the way the electricity runs is changed. In addition, it can be used to exercise safe electrical insulation for such HV electric apparatuses as bus and breaker.

This product has two posts with horizontal open breaks. It is openable in the middle and accessable to the grounding switch on one side or two sides. 90°drive's isolating switch and grounding switches adopt cs11 manual operating mechanism to execute the tri-pole linkage; 180°drive's isolating switch adopts cs11 manual operating mechanism or cs14g manual to execute the tri-pole linkage, the grounding switch adopts cs11 manual actuator to realize the tri-pole linkage.

This product conforms to GB1985 "HV AC disconnect switch and earthing switch", GB/T11022 and DL/T593 "General technical requirements on HV switches and control equipments", DL/T486 "HV AC disconnect switch and earthing switch", and satisfies the "Regulations on Ordering HV disconnect switch" that has been promulgated by the State Grid Corporation of China for perfecting the supervision.

In August 2005, GW5A product passed the improvement technology reviewed by State Grid Corporation (Jiangsu provincial branch).

■ 结构简述 Structural overview

GW5A系列隔离开关由三个单极及操动机构组成。每个单极由底座、支柱绝缘子及导电部分构成。两个可旋转的支柱绝缘子安装在一个底座上，交角成50°，呈V形布置。导电闸刀的触指臂和触头臂分别固定在绝缘支柱顶端。

操动机构驱动一侧绝缘支柱旋转，并通过连杆带动另一侧绝缘支柱反向旋转90°，使导电闸刀回转，实现隔离开关分、合闸。分闸状态形成水平绝缘断口。

GW5A disconnect switch comprises three angle poles and actuator. Each single pole is made of a base, post insulator and conductive part. Two rotating post insulators are installed at a base, with two insulators forming an angle of 50°and arranged in V shape. The contact finger arms and contact head arms of the conductive knife switch are separately fixed onto the end of the insulating post.

The actuator drives one side of the insulating post to revolve, and drives the other side of the insulating post to rotate reversely by 90°through the angular wheel or link lever, so that the knife switch will be in circumgyration to realize the opening and closing of the disconnect switch. A horizontal insulating open break will appear at the closing moment.

■ 主要特点 Main characteristics

○ 导电臂采用矩形铝合金型材制成，强度高、质量轻、散热面积大、防腐性能好。

○ The conductive arm made of rectangular Al-alloy pipes is characterized by high strength, light weight, large radiation area and strong resistance against corruption.

○ GW5A系列采用特殊铜合金制成自力型触指。依靠触指自身的弹力夹紧触头，取消了触指弹簧，杜绝因弹簧锈蚀、分流发热退火而引起的触头夹紧力降低，接触电阻增加，触头发热加剧的恶性循环。触头采用钢板卷成，与导电臂联结面积大，分合过程中触头与触指摩擦行程短，操作力小。此导电部分结构已获得国家实用新型专利（专利号：ZL03 2 20022.6）。

○ GW5A adopts particular copper alloy to develop the self-contained contact. The contact point is tightened by the elastic force of the contact itself. The contact spring is eliminated to avoid possible drop of the contact in gripping force due to the spring's corrosion and shunting, possible heating and annealing, possible increment in contact resistance, and possible vicious cycle of the growing heat of the contact. The contact is made of curved copper plate, forming a large connection area with the conductive arm. In the opening and closing processes, there is a short trip of friction between the contact and the finger and the required operating force is small. The conductive part has been acknowledged by the Chinese competent authority as a new and practical patent (Patent No.: Z03 2 20022.6).

○ 隔离开关转动部分按免维护的要求设计，转动座设计成密封结构，水汽、尘埃、有害气体无法进入，使轴承内润滑脂不流失、不固化；轴承座内部装有角接触推力球轴承，使隔离开关长期运行后的操作力矩不会增加。

○ The rotating parts of the disconnect switch are designed to be free of maintenance. The rotating base is designed into a closure structure which denies the access of moisture, dust and harmful gases so that the low-temperature lubricating cream within the bearing will not run off or harden. Within the bearing base are thrust ball bearing and radial ball bearing, both of which will share the gravity and horizontal component of the disconnect switch so that the operating torque will not increase after the long-term operation of the disconnect switch.

○ 主刀与地刀的机械联锁直接装在主刀主轴与地刀转轴上，联锁直接可靠，取消结构复杂的传动箱。现场安装调整方便，并且避免了传动箱锈蚀的问题。

○ The mechanical interlock between the primary switch and earthing switch is directly installed onto the principal axis of the primary switch and the revolution axis of the earthing switch. The interlock is direct and reliable, eliminating the structurally complex gearbox. It also facilitates easy adjustment in the field erection and avoids the corrosion of the gear box.

■ 主要技术参数Key technical parameters

项目 Item			单位 unit	参数 parameters			
额定电压Rated voltage			kV	40.5	72.5	126	
额定绝缘水平(Rated insulation level)	a)1min工频耐受电压（有效值） Rated Power Frequency Withstand Voltage(1min)	对地/相间 To earth / phase to phase	kV	95	160	230	
		开关断口 Across switching device	kV	118	160(+42)	230(+70)	
	b)额定雷电冲击耐受电压(峰值) Rated Lightening impulse withstand voltage	对地/相间 To earth / phase to phase	kV	185	350	550	
		开关断口 Across switching device	kV	215	410	550(+100)	
额定频率Rated Frequency			Hz	50/60			
额定电流Rated Current			A	630,1250,2000	1250,2000,3150	1250,2000,2500	
额定短时(1s)耐受电流Rated short-time withstand current			kA	20	40	50	50
额定峰值耐受电流Rated peak withstand current			kA	50	100	125	125
额定短路持续时间 Rated duration of short circuit	主刀/地刀 Primary switch/earthing switch		s	4/4		3/2	
额定端子机械负荷 Rated terminal mechanical load	水平纵向Horizontal-longitudinal		N	750	1000	1000	
	水平横向Horizontal-lateral		N	500	750	750	
	垂直力Vertical force		N	750	750	1000	
爬电距离Creepage distances			mm	1013、1256	1813、2248	3150、3906	
无线电干扰水平RIV Radio interference voltage level			μV	——	——	≤500	
机械寿命Mechanical endurance			次Times	5000	10000		
适用海拔高度（不大于）Applicable altitudes (no more than)			m	2000	2000	2000	
电动机操动机构 Motor operating mechanism	型号Model			CJ2			
	电机电压Motor voltage		V	AC380、DC220、DC110			
	控制回路电压Control circuit's voltage		V	AC220、AC380、DC220、DC110			
人力操动机构 Manual operating mechanism	型号Model			ES、CS11、DS、CS14G			
	电磁锁电压Electromagnetic lock's voltage		V	AC220、DC110、DC220			

■ 订货须知 Notice on ordering goods

- 订货时须说明产品型号、额定电压、额定电流、额定短时耐受电流、爬电比距等。
- 隔离开关附各接地开关的方式（不接地、左接地、右接地、双接地）、左右接地系不注明则按右接地供货。
- 操动机构型号、名称、电源电压及辅助开关接点数。
- 安装方式：水平安装、倾斜25°安装、侧装。未注明安装方式则按水平安装供货。
- 说明操动机构上配用的电磁锁选用何种电源及电压等级。

- Product model, rated voltage, rated current, rated short-time withstand current and creepage distance must be specified at the goods-ordering time.
- The disconnect switch offers several options of grounding (no, left, right, both left and right). Unless otherwise specified, the goods supplied will be considered as providing the option of right grounding.
- The operating mechanism, voltage and the number of contacts for auxiliary switch
- Methods of installation: horizontal installation, installation by the inclination of 25°, side installation. Unless otherwise specified, the horizontal installation will be taken as default
- Specify the type of power and voltage degree for the electromagnetic lock of the actuator

GW6B系列户外高压交流隔离开关GW6B outdoor HV AC disconnect switch

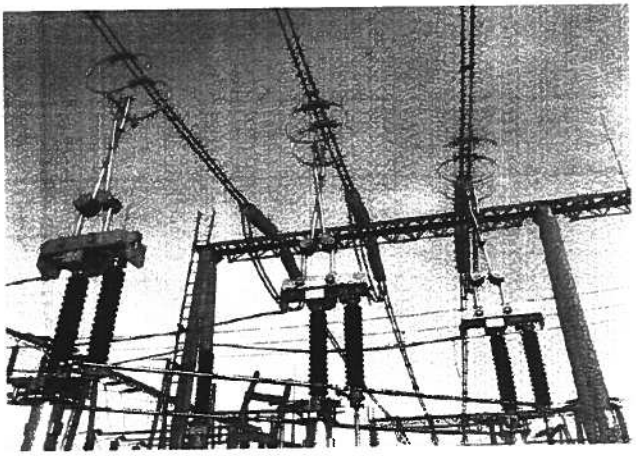

■ 概 述 Overview

GW6B系列高压交流隔离开关是三相交流频率50Hz/60Hz的户外高压输电设备，用于在无负荷情况下断开或接通线路，以便对高压线路进行转换。改变运行方式，以及对检修的母线与断路器等高压电器实行安全的电气隔离，也可分合一定数值的电感、电容小电流，并具有开合母线转换电流的能力。

本产品为单柱双臂垂直伸缩式结构（俗称剪刀式），适宜于用作母线隔离开关，可布置在母线的正下方，具有占地面积小的特点，特别是在"双母线带旁路母线"接线的变电站中，节省占地尤为显著。

本隔离开关可配装一个JW10型接地开关，供下层母线接地用，上层母线的接地需用独立的接地开关。363、550kV隔离开关和接地开关均配用SRCJ8型电动机操动机构进行单级操作，并可实现三极电气联动。126、252kV隔离开关配用SRCJ3型电动机操动机构三极联动操作，接地开关配用SRCS型人力操动机构三极联动操作。

本隔离开关符合GB1985《高压交流隔离开关和接地开关》、GB/T11022、DL/T593《高压开关设备和控制设备标准的共用技术要求》、DL/T486《交流高压隔离开关和接地开关》等标准。同时满足国家电网公司为完善化而编制的《关于高压隔离开关订货的有关规定》，通过全套型式试验，并且通过9度烈度耐地震性能计算分析。

本隔离开关通过中国机械工业联合会组织的新产品鉴定。鉴定认为："产品结构和性能满足隔离开关完善化要求，产品性能指标达到国际同类产品的先进水平"。

GW6B disconnect switch is a kind of outdoor HV electricity transmission equipments at three-phase AC frequency of 50Hz/60Hz. It is used for breaking or connecting HV lines under no loads so that these lines can be changed and connected and the way the electricity runs is changed. In addition, it can be used to exercise safe electrical insulation for such HV electric

apparatuses as bus and breaker. The switch can open and close inductance/capacitance current and is able to open and close the bus to switch current.

This product is of the single-post bi-arm vertical telescope type (scissor-type) and suitable for the bus's disconnect switch. It can be laid out directly under the bus, thus occupying a small area. Its effect of saving energy can be prominent at the substation where double bus lines are accompanied by the bypass bus.

The disconnect switch is accompanied by a JW10 earthing switch which will be used for the bus grounding at the lower layer. The grounding of the bus line at the upper layer requires the use of an independent earthing switch. 363kV and 550kV disconnect switch and earthing switch are equipped with the sRcJ8 motor actuator for the single pole operation. Meanwhile, the tri-pole linkage can be achieved. The 126kV and 252kV disconnect switches adopt SRCJ3 motor-based actuator to realize the tri-pole linkage. The earthing switch adopts SRCS manual actuator to actualize tri-pole linkage.

This product conforms to GB1985 "HV AC disconnect switch and earthing switch",GB/T11022 and DL/T593 "General technical requirements on HV switches and control equipments". DL/T486 "HV AC disconnect switch and earthing switch", and satisfies the "Regulations on Ordering HV disconnect switch" that has been promulgated by the State Grid Corporation of China for perfecting the supervision. The product passes the whole set of tests and the anti-seismic (intensity level: 9) calculation analysis.

This disconnect switch has passed the verification by the review procedure organized by China Machinery Industry Federation that the product structure and performance satisfy the requirements on perfection, and product's performance indices have reached the internally level of the same kinds of products.

■ 结构简述 Structural overview

GW6B系列隔离开关由三个单极及操动机构组成。每个单极由底座、支柱绝缘子、操作绝缘子及导电部分构成。导电部分包括固定在支柱绝缘子顶部的传动箱和折成导电臂以及悬挂在架空母线上的静触头两部分。

操动机构带动操作绝缘子，通过四连杆驱动剪刀式导电臂伸缩升降，使动触头与正上方母线上的静触头夹紧或分开，完成隔离开关合闸或分闸。分闸后形成垂直方向的绝缘断口。

GW6B disconnect switch comprises three single poles and actuator. Each single pole is made of a base, post insulator, operating insulator and conductive part. The conductive part includes the gear box and foldable conductive arm fixed on the top of the post insulator, and the fixed contact hanging on the overload bus.

The actuator drives the operating insulator, and through the four link lever-driven scissor-type conductive arm, lift and lower the insulator to tighten or separate the moving contact and fixed contact on the directly overhead bus line, to open or close the disconnect switch. After the closing, a vertical insulating break will be formed.

■ 主要特点 Main characteristics

○ 优良的导电系统：导电臂采用高导电率的铝合金制成，质量轻，强度高，防腐性能好。

○ 采用敞开式结构，主导电臂在传动底座中间，主拉杆及反向连杆外置；平衡弹簧用铝罩封闭处理，需调试的传动部位全部外露，安装调试及其方便。敞开式底座结构的关键零部件弹簧采用浸涂冷镀锌涂料（96%）80μm，最后喷涂黑色弹簧漆，加罩封闭处理，有效解决防锈蚀、防尘问题。轴承加防尘盖，外部采用密封结构。

Superior conductance system

○ With open structure, conductor is laid out in the middle of the transmission base while the main rod and reverse connecting rod are installed outside. Balancing spring is sealed with aluminum cover and transmission parts needing debugging are exposed for easy installation and debugging. Spring, the key component of open base, is dip coated with cold galvanizing for 80μm and black spring paint, then sealed with cover, effectively solving the problem of rust, dust prevention. Add a dust cover to bearing and adopt seal structure externally.

○ 本产品为双臂垂直伸缩式（剪刀式）结构，动触头的钳夹范围大，特别适用于软母线，也适用于硬母线。主导电部分和安装底座为同一中心线，结构美观。

○ Contact forceps can cover a large area of rated contact. This product is in the double arm telescopic (scissor-type) structure. The forceps of the moving contact cover a large area of rated contact, particularly applicable to soft bus line, and also to hard bus line.

○ 敞开式传动箱体，传动件可视性好，便于安装调试和点检维护；取消主拐臂，与操作法兰合二为一，减少传动环节，降低了传动底座高度，提高了传动效率和可靠性；转轴设计为双轴承结构（轴两端与导电拐、导电夹与轴之间轴承过渡），传动灵活可靠。

○ Open gear box, which has a good visibility, is convenient for installation, debugging and maintenance. The main crank arm is combined with operating flange to reduce the transmission link and the height of transmission base, which can improve the transmission efficiency and reliability. The rotation shaft is designed as double bearing structure so that the transmission is flexible and reliable.

○ 机电分离的结构设计。采用机电分离的设计理念，导电元件与弹簧及机械传动元件相互绝缘，防止弹簧及机械传动元件通过电流，以提高传动部件的工作稳定性。

○ Structural design: the seperation of machines from power.

The design concept is the separation of machines from power, that is, the conductive elements, springs and mechanical driving elements are mutually isolated to prevent current from passing through springs and mechanical driving elements. In this way, the stability of the driving elements can be enhanced.

■ 订货须知 Notice on ordering goods

○ 订货时请注明产品型号、额定电压、额定电流、额定短时耐受电压、爬电距离等。

○ 隔离开关是否附装接地开关。

○ 隔离开关上层母线是软母线还是管母线，注明管母线的外径。

○ 隔离开关的布置方式——交叉布置或并列布置。

○ 操动机构型号、名称、电机电压、控制电压及辅助开关接点数。

○ Product model, rated voltage, rated current, rated short-time withstand current and creepage distance must be specified at the goods-ordering time.

○ It must be decided whether a earthing switch should be attached to the disconnect switch.

○ It must be decided whether the upper bus line of the disconnect switch is soft or hard. Additionally, the external diameter of the tubular busbar shall be specified.

○ It must be decided whether the disconnect switch is arranged in cross-over or parallel form.

○ The actuator's model and name, motor's voltage, control voltage and the number of contacts for auxiliary switch.

Kawara Trade S.A.

主要技术参数 Key technical parameters

项目 Item		单位 unit	参数 parameters			
产品型号Product model			GW6B-126D(G-W)	GW6B-252D(G-W)	GW6B-363D(G-W)	GW6B-550D(W)
额定电压Rated voltage		kV	126	252	363	550
额定绝缘水平 Rated insulation level	a)1min工频耐受电压（有效值） Rated Power Frequency Withstand Voltage(1min) 对地 / 相间 To earth / phase to phase	kV	230	460	510	740
	开关断口 Across switching device		230(+70)	460(+145)	510(+210)	740(+315)
	b)额定雷电冲击耐受电压(峰值) Rated Lightening impulse withstand voltage 对地 / 相间 To earth / phase to phase	kV	550	1050	1175	1675
	开关断口 Across switching device		550(+100)	1050(+200)	1175(+295)	1675(+450)
	c)额定操作冲击耐受电压(峰值) Rated operating impulse withstand voltage (peak) 对地 / 相间 To earth / phase to phase		——	——	1425 /950	1950/1300
	开关断口 Across switching device		——	——	850(+295)	1175(+450)
额定频率Rated Frequency		Hz	50/60	50/60	50/60	
额定电流Rated Current		A	2000,3150	2000,2500,3150, 4000/5000	3150/5000	4000
额定峰值耐受电流Rated peak withstand current		kA	125	125/160	125/160	160
额定短时耐受电流Rated short-time withstand current			50	50/63	50/63	63
额定短路持续时间Rated duration of short circuit		s	3	3	3	
额定端子机械负荷 Rated terminal Mechanical load	水平纵向Horizontal-longitudinal	N	1250	2000	2500	4000
	水平横向Horizontal-lateral		750	1500	2000	2000
	垂直力Vertical force		1000	1250	1500	2000
隔离开关母线转换电流开合能力(2) Bus-transfer current switching capability of disconnectors			100V，1600A，100KR	300V，1600A，100KR	450V，3200A，33KR	400V，1600A，100KR
额定接触区 Rated contact area	纵向偏移（硬导线/软导线） Longitudinal displacement of guidewires (hard guidewire/soft guidewire)	mm	100/100	150/200	150/200	175/200
	水平总偏移（硬导线/软导线） Horizontal offset in total (hard guidewire/soft guidewire)		100/350	150/500	150/500	175/600
	垂直偏移（硬导线/软导线） Vertical offset (hard guidewire/soft guidewire)		100/200,300	150/250,450	150/300,450	175/400,500
隔离开关小电流开合能力 Isolating switch small Current opening/closing capacity	电容电流 Capacitive current	A	1	1	1	2
	电感电流 Inductive current	A	0.5	0.5	0.5	1
无线电干扰电压RIV radio interference voltage		μV	≤500		≤500	
爬电距离Creepage distance		mm	3150/3906	6300/7812	≥9450	≥13750
机械寿命（M1级）Mechanical endurance (M1)		次times	5000	5000	5000	
适用海拔高度Applicable altitudes		m	≤2000	≤2000	≤3000	≤1000
电动机操动机构 Motor operating mechanism	型号Model		SRCJ3	SRCJ3	SRCJ3	
	电机电压Motor voltage	V	AC380/DC220	AC380/DC220	AC380/DC220	
	控制回路电压Control circuit's voltage	V	AC220/DC220/DC110		AC220/DC220/DC110	
	分、合闸时间Opening time and closing time	s	12 ± 1	12 ± 1	16 ± 1	
	输出轴角Output shaft rotation		135°	135°	180°	
人力操动机构 Manual operating mechanism	型号Model		SRCS	SRCS		
	控制回路电压Control circuit's voltage	V	AC220	AC220		

注：(1)绝缘水平为DL/T593规定最高等级。

(2)正常情况下，只有双母线及单路母线的母线隔离开关，在需要时才需要开合母线转换电流；单母线的母线隔离开关、母联隔离开关及线路隔离开关，不必要具有开合母线转换电流的性能。

Notes: (1) Insulating level is the highest for DL/T593.

(2) Under normal circumstances, only the disconnect switch for double bus and bypass bus will require the opening/closing bus to switch current at the moment of transfer switching. The bus disconnect switches of single bus and busmap and the disconnect switches for the power line don' t require the opening/closing bus to switch currents.

GW7B系列户外高压交流隔离开关GW7B outdoor HV AC disconnect switch

概 述 Overview

GW7B系列隔离开关系三相交流频率50Hz/60Hz的户外高压输电设备，用以在无负载情况下断开或接通高压线路，以伸入高压线路进行换接，改变运行方式，以及对检修的母线与断路器等高压电器设备实行安全的电气隔离，也可以分合一定数值的电感、电容小电流，并具有开合母线转换电流的能力。

本产品为三柱水平断口闸刀翻转式，可以一侧或两侧附装JW10型接地开关。72.5~252kV隔离开关采用CJ2或SRCJ2型电动机操动机构三级联动操作；接地开关采用CS11或SRCS型人力操动机构三级联动操作。363kV隔离开关采用SRCJ2型电动机操动机构单级操作，接地开关采用SRCS型人力操动机构或SRCJ2型电动操作机构单级操作，并可实现三级电气联动。

本产品符合GB1985《高压交流隔离开关和接地开关》、GB11022、DL/T593《高压开关设备和控制设备标准的共用技术要求》、DL/T486《交流高压隔离开关和接地开关》等标准，同时满足国家电网公司为完善化而颁布的《关于高压隔离开关工况的有关规定》。通过全套型式试验，并且通过9度烈度的耐地震计算分析。

本产品通过国家鉴定。鉴定认为"在产品设计上具有特点，产品性能达到国际同类产品的先进水平"。

GW7B disconnect switch is a kind of outdoor HV electricity transmission equipments at three-phase AC frequency of 50Hz/60Hz. It is used for breaking or connecting HV lines under no loads so that these lines can be changed and connected and the way the electricity runs is changed. In addition, it can be used to exercise safe electrical insulation for such HV electric apparatuses as bus and breaker. The switch can open and close inductance/capacitance current and is able to open and close the bus to switch current.

This product has three posts with horizontal open breaks. JW10 grounding switches may be attached to the product at one or two sides. 72.5~252kV disconnect switch adopts CJ2 or SRCJ2 manual actuator to realize the tri-pole linkage. The earthing switch adopts CS11 or SRCS manual actuator to actualize tri-pole linkage 363kV disconnect switch adopts SRCJ2 motor's actuator to realize the single pole operation, while the earthing switch takes SRCS manual actuator or SRCJ2 motor's actuator to realize the single pole operation and also tri-pole linkage

This product conforms to GB1985 "HV AC disconnect switch and earthing switch", GB/T11022 and DL/T593 "General technical requirements on HV switches and control equipments", DL/T486 "HV AC disconnect switch and earthing switch", and satisfies the "Regulations on Ordering HV disconnect switch" that has been promulgated by the State Grid Corporation of China for perfecting the supervision. The product passes the whole set of tests and the anti-seismic (intensity level: 9) calculation analysis.

This product has been verified by the Chinese competent authority as having uniqueness in design and reaching international advanced level of similar products.

结构简述 Structural overview

GW7B系列隔离开关由三个单极及操动机构组成。每个单极由底座、支柱绝缘子及导电部分构成，一个长条底座上安装三个绝缘支柱，两静触头安装在两端固定绝缘支柱顶端，中间转动绝缘支柱顶端安装导电闸刀。

操动机构驱动中间转动支柱，带动导电闸刀水平回转，与两端固定支柱上的静触头接触或分离，实现隔离开关合闸或分闸。分闸状态形成两个串联的水平绝缘断口。

导电闸刀在分、合闸过程中，通过翻转机构实现两步动作一水平摆动及自身翻转，以减少分合闸操作力及冲击力，并可提高触头自清扫能力。

GW7B disconnect switch comprises three single poles and actuator. Each single pole is made of a base, post insulator and conductive part. Three insulating posts are installed onto a long base, with two static contacts mounted at both ends to fix the top of the insulating post, and the conductive knife switch mounted onto the top of the rotating insulating post in between.

The actuator drives the rotating post in the middle to bring the conductive knife switch circumgyrate to open or close the breaker by contacting or detaching the static contacts fixed on the both ends of the post. Two horizontal insulating open breaks in series will appear at the closing moment.

In the opening and closing process, the conductive knife switch will horizontally swing and auto-rotate, with the aid of the turnover mechanism, to reduce the operating force and impact that occur in the opening and closing process and to improve the contact's ability of self-cleaning.

主要特点 Main characteristics

隔离开关采用翻转式，导电管具有两步动作。合闸时导电管先在水平面上转动约70°，当两端触头进入静触座被挡住后，翻转机构带动导电管自转约45°，动触头即与触指可靠接触，操作力小，对两端固定绝缘子没有冲击力，主触头具有自清扫能力。

The disconnect switch is of the turnover-type, and the conductive tube will move in two steps. At the closing moment, the conductive tube will rotate by some 70° on the horizontal surface. When the contacts at both ends are blocked up after having been placed in the static contact base, the turnover mechanism will drive the conductive tube to automatically by about 45° when the movable contact will be in reliable contact with the touch finger. This process requires small operating force, thus causing no impacts on the insulators fixed at both ends. The main contact has the self-cleaning ability.

合闸过程示意图
Schematic Diagram of Switching in Process

静触头中的U形触指一端固定在触头座上，形成固定连接，导电可靠；另一端通过外压式弹簧及触指自身弹力对动触头产生接触压力，接触电流通过时自动增加夹紧力，触指弹簧为不锈钢材质并有绝缘隔垫，弹簧不锈蚀不分流。

One end of the U-shaped finger within the static contact is fixed onto the contact base, forming a fixed connection and ensuring the reliable conduction, while the other end will produce contact pressure on the movable contact as a result of the influence of external spring and the own elastic force of the contact finger, and the gripping force will automatically increase when the short-circuit current passes through the contact. The contact spring is made of stainless steel and is equipped with insulating gasket. The spring will not corrupt nor shunt.

U形触指

隔离开关转动部位按免维护要求设计，转动座为全密封结构，水汽、尘埃、有害气体无法进入，轴承内润滑脂不流失、不硬化。

C. The rotating parts of the disconnect switch are designed to be free of maintenance. The rotating base is designed into a closure structure which denies the access of moisture, dust and harmful gases so that the low-temperature lubricating cream within the bearing will not run off or harden.

363kV接地开关为单臂立开式结构，触头为插入式，结构简单，分、合闸时操作导电杆分两步动作，合闸时，接地导电杆从水平向上转动升至静触头处，再向上直动插入梅花触头中，接触可靠，承受短路电流能力强。

363kV earthing switch is in the single-arm standing and openable structure, with the structurally simple and plug-type contact. The conductive rod for grounding will move in two steps at the moments of opening and closing. At the moment of closing, the conductive rod will rotate vertically and rise up to the fixed contact, and then automatically plug itself into the star-shaped contact. By doing so, the contact will be made reliable and be able to sustain the heavy short-circuit current.

主要技术参数 Key technical parameters

项目 Item		单位 unit	参数 parameters					
产品型号Product model			GW7B-72.5DW	GW7B-145DW	GW7B-252DW	GW7B-363DW	GW7B-550DW	GW7B-800DW
额定电压Rated voltage		kV	72.5	145	252	363	420	800
短时工频耐受电压（有效值）Rated Power Frequency Withstand Voltage(1min)	对地 / 相间 To earth / phase to phase		204.8	380	588.8	510	520	960
	开关断口 Across switching device		256	444	588.8(+185.6)	510(+210)	610	960(+362)
接地开关合闸过程中的最短距离时 When the shortest distance occurs in the opening and closing of earthing switch		kV	107.52	210	372.48	419	484	
b)额定雷电冲击耐受电压(峰值) Rated Lightening impulse withstand voltage	对地 / 相间 To earth / phase to phase		448	870	1344	1175	1425	2100
	开关断口 Across switching device		524.8	1043	1344(+256)	1175(+295)	1425(+240)	2100(+650)
c)额定操作冲击耐受电压(峰值) Rated operating impulse withstand voltage (peak)	对地 / 相间 To earth / phase to phase		—	—	—	1425 / 950	1575 / 1050	2635/1550
	开关断口 Across switching device		—	—	—	850(+295)	900(+345)	1425(+650)
额定频率Rated Frequency		Hz	50/60					50
额定电流Rated Current		A	1250,1600/2500,3150,4000	1250/2000	2000/2500 3150,4000,5000	3150 5000	3150	6300
额定峰值耐受电流Rated peak withstand current		kA	100/125	80/100	125/160	160	160	160
额定短时耐受电流Rated short-time withstand current			40/50	31.5/40	50/63	63	63	63
额定短路持续时间Rated duration of short circuit		s	4			3	2	3
额定端子机械负荷 Rated terminal Mechanical load	水平纵向 horizontal-longitudinal	N	500/750	750	1000	2000	660	2000
	水平横向horizontal-lateral		750	1000	1250	1500	1500	2000
	垂直力Vertical force							
隔离开关母线转换电流开合能力* Bus-transfer current switching capability of disconnectors			100V,1600A, 1000次	100V,1600A, 1000次	300V,1600A, 1000次	450V,3200A,3次 400V,800A,100次	300V,1600A, 1000次	40V,1600A, 1000次
感应开关感应电流开合能力* Induced current switching capability of earthing switch	电磁感应电流/电压) Electromagnetic induction-type current (current/voltage)	A/kV	100/4 (80/2)	100/6 (80/2)	160/15 (80/2)	1250/35 (160/10)	160/10 (80/2)	200/7(80/7)
	静电感应电流/电压) Electrostatic induction-type current (current/voltage)	A/kV	2/6	5/6 (2/6)	10/15 (3/12)	50/50 (18/17)	18/20 (1.25/5)	25/100(3/12)
	开合次数 Times of opening and closing	次 Times	10					

隔离开关小电流开合能力 Isolating switch small Current opening/closing capacity	电容电流Capacitive current	A	——	1	1	1	1	2
	电感电流Inductive current	A	——	0.5	0.5	0.5	0.5	1
无线电干扰电压10V radio interference voltage		μV	≤500					
爬电距离Creepage distances		mm	≥1813,2248	≥3625,4495	≥6300,7812	≥9450	≥10500	≥20000
机械寿命（M级）Mechanical endurance (M1)		次 times	5000	5000	10000	5000	10000	10000
适用海拔高度Applicable altitudes		m	≤2000	≤2000	≤2000	≤3000	≤1000	≤2000
电动机操动机构 Motor Operating mechanism	型号Model		CJ2		SRCJ2		SRCJ2	SRCJ
	电机电压Motor voltage	V	AC380/DC220					
	控制回路电压 Control circuit's voltage	V	AC220/DC220/DC110					
	分、合闸时间 Opening time and closing time	s	7±1		16±1		16±1	24±2
	输出转角Output shaft rotation		180°		180°		180°	180°
人力操动机构 Manual operating mechanism	型号Model		CS11		SRCS	SRCS	SRCS	
	控制回路电压 Control circuit voltage	V	AC220					

注：①绝缘水平为DL/T593的最高级。

②参数为DL/T486-2010中的规定值，括号内为GB1985-2014中的规定值。GB/T8-383参数为实际试验的参数，高于DL/T486中的规定值。

③正常情况下，只需双母线及全绝缘的母线隔离开关，在倒闸时作母线开合电流转换之用，单母线、单母分段母线隔离开关，不必提供有开合母线转换电流的能力。

Notes: ①Insulating level is the highest for DL/T593.

②The parameters are the specifications for Type B of DL/T486-2010. The parameters included in the brackets are the specified values for Type B in GB 1985-2014. GB/T8-383 parameters are the ones that have been deemed as being met in the actual tests. They are higher than prescribed values for Type B in DL/T486.

③Under normal circumstances, only the disconnect switch for double-bus and bypass bus will require the opening/closing bus to switch current at the moment of transfer switching. The single bus, busecouple and large quantities of disconnect switches at substations don't require the opening/closing bus to switch currents.

■ 订货须知 Notice on ordering goods

① 订货时请注明产品型号、额定电压、额定电流、额定短时耐受电流、爬电距离及组合方式等。

② 隔离开关附装接地开关的方式（左接地、右接地、双接地）。

注：左、右接地判别方法——面对铭牌，接地开关在左手侧为左接地，在右手侧为右接地。

③ 操动机构型号、名称、电机电压、控制电压及辅助开关接点数。

④ 电流互感器为需方订货，但必须能装设静触头。

⑤ 本隔离开关用于同塔双回路平行架空输电线路中变电站进出线端时，其附装的接地开关若需要开合感应电流，请特别说明，并且说明要求的参数及接地开关装在哪侧。（特别提示：并非变电站中所有接地开关和隔离开关附装的接地开关，都需要开合感应电流。）

① Product model, rated voltage, rated current, rated short-time withstand current, creepage distance and method of combination must be specified at the goods-ordering time.

② The methods of attaching earthing switches to disconnect switches (left, right and both left and right)

Note: the way to judge the method of grounding: when one faces the name plate, the left grounding will be confirmed if the earthing switch is at the left hand side, and right grounding if at the right hand side.

③ The actuator's model and name, motor's voltage, control voltage and the number of contacts for auxiliary switch

④ Current transformers are ordered by purchasers; however, it must be ensured that fixed contacts can be mounted onto such transformers.

⑤ When the disconnect switch is used at the incoming and outgoing terminals of the substation in the double loop parallel overhead power transmission line, if the earthing switch requires the opening/closing induction current, then such requirement shall be specified. Besides, the parameters and the side at which the earthing switch is set shall be defined. (Special notice: Not all earthing switches attached to the earthing switches and disconnect switches at the substation shall require the opening/closing induction current.)

GW22B系列户外高压交流隔离开关GW22B outdoor HV AC disconnect switch

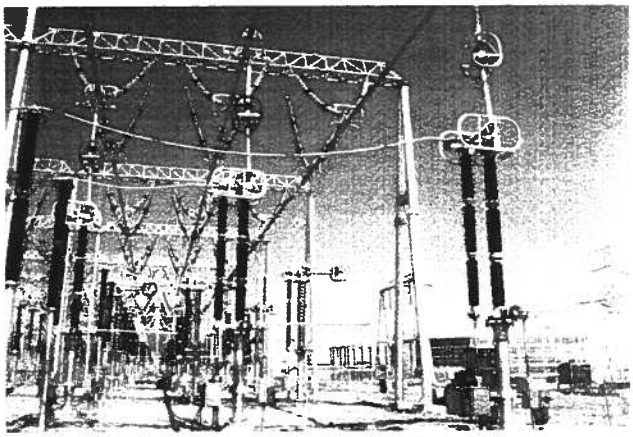

■ 概 述 Overview

GW22B系列高压交流隔离开关是三相交流频率50Hz/60Hz的户外高压输变电设备，用于在无负荷情况下断开或接通母线路，以便对高压线路进行转换、改变运行方式，以及对检修的母线与断路器等高压电器实行安全的电气隔离，也可以分合一定数值的电感、电容小电流，并具有开合母线转换电流的能力。

本产品为单柱单臂垂直伸缩式结构，触头为钳夹式，分闸后形成垂直的绝缘断口，适用于作母线隔离开关使用，直接安装在母线的正下方，具有占地面积小的优点。可以附装JW10型接地开关，作为下层母线接地用，上层母线接地用装设独立的接地开关。363、550kV隔离开关和接地开关均配用SRCJ8型电动机操动机构进行单相操作，并可实现三极电气联动。126、252kV隔离开关分别配用SRCJ7、SRCJ3型电动机操动机构三极联动操作，接地开关分别采用CS11、SRCS型人力操动机构三极联动操作。

本产品符合GB1985《高压交流隔离开关和接地开关》、DL/T486《交流高压隔离开关和接地开关订货技术条件》及GB/T11022、DL/T593《高压开关设备和控制设备标准的共用技术要求》等标准，同时满足国家电网公司为完善化而编制的《关于高压隔离开关订货的有关规定》，通过全套型式试验，并且进行了9度烈度耐地震的计算分析。

本隔离开关通过了中国机械工业联合会组织的新产品国家技术鉴定，鉴定认为："产品结构和性能满足隔离开关完善化要求，产品性能指标达到国际同类产品的先进水平"。

GW22B disconnect switch is a kind of outdoor HV electricity transmission equipment at three-phase AC frequency of 50Hz/60Hz. It is used for breaking or connecting HV lines under no loads so that these lines can be changed and connected and the way the electricity runs is changed. In addition, it can be used to exercise safe electrical insulation for such HV electric apparatuses as bus and breaker. The switch can open and close inductance/capacitance current and is able to open and close the bus to switch current.

This product is in the single-post single arm vertical telescopic structure. The contact is of the forceps-type. Vertical insulating breaks will be formed after the opening. The product can be used as an disconnect switch for bus. It is directly installed directly under the bus and only

occupies a small space. JW10 earthing switch can be attached for grounding the bus at the lower layer. The grounding for the bus at the upper layer requires an independent earthing switch. 363kV and 550kV disconnect switch and earthing switch are equipped with the sRcJ6 motor actuator for the single pole operation. Meanwhile, the tri-pole linkage can be achieved. The 126 and 252kV isolating switches adopt sRcJ7 and sRcJ3 motor-based actuators to realize the tri-pole linkage. The grounding switch adopts ca11 and sRce manual actuators to actualize tri-pole linkage.

This product conforms to GB1985 HV AC isolating switch and grounding switch, DL/T486 Technical requirements on ordering AC HV isolating switch and grounding switch, GB/T11022 and DL/T593 General technical requirements on HV switches and control equipments, and satisfies the Regulations on Ordering HV isolating switch that has been promulgated by the State Grid Corporation of China for perfecting the supervision. The product passes the whole set of tests and the anti-seismic (intensity level: 9) calculation analyses.

This disconnect switch has passed the verification by the review procedure organized by China Machinery Industry Federation that the product structure and performance satisfy the requirements on perfection, and product's performance indices have reached the internally level of the same kinds of products."

■ 结构简述 Structural overview

GW22B系列隔离开关由三个单极及操动机构组成。每个单极由底座、支柱绝缘子、操作绝缘子及导电部分构成。导电部分包括固定在支柱绝缘子顶部的折迭导臂及悬挂在架空母线上的静触头两部分。

操动机构带动操作绝缘子，通过连杆驱动折迭导电臂伸缩升降，使动触头与正上方母线上的静触头夹紧或分开，完成隔离开关合闸或分闸。分闸后形成垂直方向的绝缘断口。

GW22B disconnect switch comprises three single poles and actuator. Each single pole is made of a base, post insulator operating insulator and conductive part. The conductive part includes the gear box and foldable conductive arm fixed on the top of the post insulator, and the fixed contact hanging on the overload bus.

The actuator drives the operating insulator, and through the link lever-driven conductive arm, lift and lower the insulator to tighten or separate the moving contact and fixed contact on the directly overhead bus line to open or close the disconnect switch. After the opening, a vertical insulating break will be formed.

■ 主要特点 Main characteristics

① 先进的结构

隔离开关采用单臂折叠伸缩结构，传动部件及平衡弹簧均密封在导电管内，减少自然环境对产品的影响，外形美观简洁。

传动基座采用连杆结构，与采用伞齿轮的产品相比结构简单，调整方便。

① State-of-art structure

The disconnect switch is in the single-arm, foldable and telescopic structure. The driving elements and balancing springs are sealed within the conductive tube to reduce their adverse effects on natural environment and render the appearance compact and simple.

The drive base adopts a link lever. Compared with angular wheels, the product is simpler and easier to adjust.

② 优良的导电系统

导电部件采用高导电率铝合金型材制成，导电性能好，机械强度高，重量轻，防腐性能力强。

折迭臂折叠部位电流通过软连接传输，没有活动接点，导电可靠，实现少维护，免检查及长期可靠运行。

② Superior conductance system

The conductive part made of Al-alloy of high conductance rate is characteristic of good conductance, high mechanical strength, light weight and strong corrosion resistance.

The current will pass through the foldable area of the conductive arm via soft connection (without recourse to any movable contacts) to ensure reliable conductance, few maintenance, no examination, and long-term reliable operation.

③ 稳定的静触头结构

悬挂式静触头采用纯铝铰线圈环固定，通流能力高。静触头同时通过钢丝绳三角形悬挂固定，调整方便，稳定性好，而且可使静触头上下位移量减少。

③ Stable static contact structure

The hanging fixed contact is fixed with a pure alloy conductor ring to realize high degree of current flow capacity. The fixed contacts are hanged and fixed with the steel wires in the triangle shape to ensure the adjustment friendliness, stability and the reduction in vertical displacement.

④ 具有特色的钳夹式触头

触头为钳夹式，动触刀增设外压式弹簧，保证恒定的接触压力。触刀下端与触座为软连接相连，没有活动接触点，导电可靠，避免产生接触不良而引起过热。

动触头座与上导电管为焊接结构，没有夹头锐口进水的问题。触头座与拉杆之间采用特殊的密封结构，动触头座不进水不积水，可以避免导电臂内零件生锈或冬季结冰所造成的运动障碍，消除隔离开关拒分拒合现象。

动、静触头上可装设引弧触头，使隔离开关具有优良的开合母线转换电流及电容、电感小电流的能力。

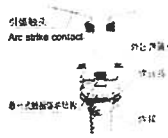

④ Unique forceps-type contact

The contact is of the forceps-type. The moving knife switch will be additionally accompanied by the external spring to ensure the constant contact pressure. The lower end of the knife switch is in soft connection with the base (without recourse to any movable contacts) to ensure reliable conductance and avoid the over-heating from poor contact.

The base for the moving contact is welded with the upper guidetube to prevent the water from penetrating into the melting mouth of the clamping head. The connection between the base of the contact and the draw rod is uniquely sealed to ensure no water penetration or accumulation at the base for the movable contact. In this way, the rust of parts within the conductive arm or the obstacles to the movement of the contact as a result of the ice coating in winter will be eliminated, and the failure of the disconnect switch to be opened or closed will also be avoided.

The arc contact can be mounted onto the movable and fixed contacts to enable the disconnect switch to switch current, capacitive and inductive current by opening and closing bus line.

⑤ 简单有优的接地开关

363kV及以上接地开关为单臂立开式结构，触头为插入式，结构简单。分、合闸时接地导电杆分两步动作，合闸时，接地导电杆从水平向上转动至静触头处，再向上直动插入梅花触头中，接触可靠，承受短路电流能力强。

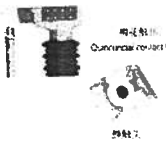

⑤ Simple and superior earthing switch

363kV and above earthing switch is in the single-arm standing and openable structure, with the structurally simple plug-type contact. The conductive rod for grounding will move in two steps at the moments of opening and closing. At the moment of closing, the conductive rod will rotate vertically and rise up to the fixed contact, and then automatically plug itself into the star-shaped contact. By doing so, the contact will be made reliable and be able to sustain the heavy short-circuit current.

■ 主要技术参数 Key technical parameters

项目 Item		单位 Unit	参数 parameters				
产品型号Product model			GW22B-126(G)W	GW22B-252(G)W	GW22B-363(G)W	GW22B-550(G)W	GW22B-420(G)W
额定电压Rated voltage		kV	126	252	363	550	420
额定短时工频耐受电压（有效值）Rated Short-duration Power Frequency Withstand Voltage(rms)	对地 / 相间 To earth / phase to phase	kV	230(+70)	460(+145)	510(+210)	740(+315)	610
	开关断口 Across switching device		230(+70)	460(+145)	510(+210)	740(+315)	610
额定雷电冲击耐受电压峰值 Rated Lightening impulse withstand voltage	对地 / 相间 To earth / phase to phase	kV	550	1050	1175	1675	1425
	开关断口 Across switching device		550(+100)	1050(+200)	1175(+295)	1675(+450)	1425(+240)
额定操作冲击耐受电压峰值 Rated operating impulse withstand voltage (peak)	对地 / 相间 To earth / phase to phase	kV	——	——	1425/950	1950/1300	1575/1050
	开关断口 Across switching device		——	——	850(+295)	1175(+450)	900(+345)
额定频率Rated Frequency		Hz	50/60		50/60		50/60
额定电流Rated Current		A	1250,2000, 3150,4000	1600,2000/2500 3150,4000,5000	4000,5000	4000,5000	3150
额定峰值耐受电流Rated peak withstand current			125	125/160	160	160	160
额定短时耐受电流Rated short-time withstand current			50	50/63	63	63	63
额定短路持续时间Rated duration of short circuit		s	3		3		3

额定端子机械负荷 Rated terminal Mechanical load	水平纵向horizontal-longitudinal	N	1250	2000	2500	4000	4000
	水平横向horizontal-lateral		750	1500	2000	2000	1600
	垂直力Vertical force		1000	1250	1500	2000	1500
隔离开关母线转换电流开合能力[1] Bus-transfer current switching capability			100V,1600A, 100次	300V,1600A, 100次	450V,3200A,3次 400V,1600A,100次		300V,1600A, 100次
额定接触区 Rated contact area	支撑导线纵向位移（硬导线/软导线） Longitudinal displacement of guidewires (hard guidewire/soft guidewire)	mm	100/100	150/200	150/200	175/200	150/200
	水平已偏移（硬导线/软导线） Horizontal offset in total (hard guidewire/soft guidewire)		100/350	150/500	150/500	175/600	150/500
	垂直偏移（硬导线/软导线） Vertical offset (hard guidewire/soft guidewire)		100/200	150/250	150/300	175/400	150/300
隔离开关小电流开合能力 Disconnect switch small Current opening/closing capacity	电容电流Capacitive current	A	1	1	1	2	1
	电感电流Inductive current	A	0.5	0.5	0.5	1	0.5
无线电干扰电压RIV radio interference voltage		μV	≤500		≤500		≤500
爬电距离Creepage distance		mm	3150/3906	6300/7812	≥9450	≥13750	≥10500
机械寿命（M级）Mechanical endurance (M)		次 Times	5000	10000	5000		10000
适用海拔高度Applicable altitudes		m	≤2000	≤2000	≤3000	≤1000	≤1000
电动机操动机构 Motor operating mechanism	型号Model		SRCJ7	SRCJ3	SRCJ2		SRCJ2
	电机电压Motor voltage	V	AC380/DC220				
	控制回路电压 Control circuit's voltage	V	AC220/DC220/DC110				
	分、合闸时间 Opening time and closing time	s	10 ± 1	12 ± 1	16 ± 1		16 ± 1
	输出转角 Output shaft rotation		135°		180°		180°
人力操动机构 Manual operating mechanism	型号Model		CS11	SRCS	——		——
	控制回路电压 Control circuit's voltage	V	AC220		——		——

注：[1]绝缘水平为DL/T593规定最高级。

(2)正常情况下，只有双母线及旁路母线的母线隔离开关，在母联断开开合母线转换电流；单母线的母线隔离开关、母联隔离开关及母线隔离开关，不必具有开合母线转换电流的性能。

Notes (1) Insulating level is the highest for DL/T593

(2) Under normal circumstances, only the isolating switch for bi-bus and bypass bus will require the opening/closing bus to switch current at the moment of transfer switching. The bus isolating switches at single bus, the isolating switch of the buscouple and the isolating switches for the power line don't require the opening/closing bus to switch currents.

订货须知 Notice on ordering goods

- 订货时请注明产品型号、额定电压、额定电流、额定短时耐受电压、爬电距离等。
- 如高开关是否附装接地开关。
- 隔离开关上所母线是软母线还是硬母线，注明管母线的外径。
- 隔离开关的布置方式——交叉布置或并列布置。
- 操动机构型号、电机电压、控制电压及辅助开关接点数。

- Product model, rated voltage, rated current, rated short-time withstand current and creepage distance must be specified at the goods-ordering time.
- It can be decided whether a earthing switch should be attached to the disconnect switch.
- It must be decided whether the upper bus line of the disconnect switch is soft or hard. Additionally, the external diameter of the tubular busbar shall be specified.
- It must be decided whether the disconnect switch is arranged in cross-over or parallel form.
- The actuator's model, motor's voltage, control voltage and the number of contacts for auxiliary switch

GW23B系列户外高压交流隔离开关GW23B outdoor HV AC isolating switch

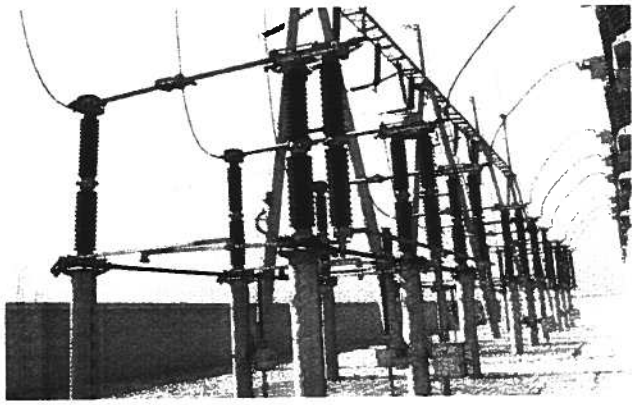

概 述 Overview

GW23B系列高压交流隔离开关是三相交流频率50Hz/60Hz的户外高压输变电设备，用于在无负荷情况下断开或接通线路，以便对高压线路进行转换、改变运行方式，以及对检修的母线与断路器等高压电器实行安全的电气隔离，也可以分合一定数值的电感、电容小电流，并具有开合母线转换电流的能力。

本产品为双柱水平伸缩式结构，触头为插入式，分闸后形成水平的绝缘断口。适用于110至500kV变电站中作为绝缘隔离开关使用。可以一侧或两侧附装JW10型接地开关，当把两组GW23B型隔离开关组合成共静触头形式时，适用于一倍半接线，可以节省变电站的占地面积。363、550kV隔离开关和接地开关均配用SRCJ2型电动机操动机构进行单极操作，并可实现三极电气联动。126、252kV隔离开关分别配用SRCJ7、SRCJ3型电动机操动机构三极联动操作，接地开关分别采用CS11、SRCS型人力操动机构三极联动操作。

本产品符合GB1985《高压交流隔离开关和接地开关》、DL/T486《交流高压隔离开关和接地开关》及GB/T11022、DL/T593《高压开关设备和控制设备标准的共用技术要求》等标准，同时满足国家电网公司为完善化而颁布的《关于高压隔离开关订货的有关规定》，通过全套型式试验，并且进行了9度烈度耐地震的计算分析。

本隔离开关通过了中国机械工业联合会组织的新产品国家技术鉴定，鉴定认为："产品结构和性能满足隔离开关完善化要求，产品性能指标达到国际同类产品的先进水平"。

GW23B disconnect switch is a kind of outdoor HV electricity transmission equipment at three-phase AC frequency of 50Hz/60Hz. It is used for breaking or connecting HV lines under no loads so that these lines can be changed and connected and the way the electricity runs is changed. In addition, it can be used to exercise safe electrical insulation for such HV electric apparatuses as bus and breaker. The switch can open and close inductance/capacitance current and is able to open and close the bus to switch current.

This product is in the double-post horizontal telescopic structure, with the plug-type contact. After the opening, a horizontal insulating break will be formed. The product can be used as an disconnect switch at the 110kV to 550kV substation. The JW10 earthing switch can be attached at one or two sides. When two GW23B disconnect switches are combined into a fixed contact, half of the line for a switch can be cut off and the land coverage can be saved. 363kV and 550kV disconnect switches are equipped with the SRCJ2 motor actuator for the single pole operation. Meanwhile, the tri-pole linkage can be achieved. The 126kV and 252kV disconnect switches adopt SRCJ7 and SRCJ3 motor-based actuators to realize the tri-pole linkage. The earthing switch adopts CS11 and SRCS manual actuators to actualize tri-pole linkage.

Kawara Tra

This product conforms to GB1985 HV AC isolating switch and grounding switch, DL/T486 Technical requirements on ordering AC HV isolating switch and grounding switch, GB/T11022 and DL/T593 General technical requirements on HV switches and control equipments, d and satisfies the Regulations on Ordering HV isolating switch that has been promulgated by the State Grid Corporation of China for perfecting the supervision. The product passes the whole set of tests and the anti-seismic (intensity level: 9) calculation analysis.

This disconnect switch has passed the verification by the review procedure organized by China Machinery Industry Federation that the product structure and performance satisfy the requirements on perfection, and product's performance indices have reached the internally level of the same kinds of products.

■ 结构简述 Structural overview

GW23B系列隔离开关由三个单极及操动机构组成。每个单极包括动侧支柱、静侧支柱两部分。动侧支柱由底座、支柱绝缘子、操作绝缘子及折迭导电管几部分构成；静侧支柱由底座、支柱绝缘子及静触头构成。

操动机构带动操作绝缘子，通过连杆驱动折迭导电管在水平方向伸缩，使动触头插入或拉出静触头，完成隔离开关合闸或分闸。分闸后形成水平方向的绝缘断口。

GW23B disconnect switch comprises three single poles and actuator. Each pole consists of a movable side post and a fixed side post. The movable side post is made up of a base, post insulator, operating insulator, foldable conductive tube, while the static side post comprises a base, post insulator and static contact.

The actuator drives the operating insulator, and through the link lever, brings the foldable conductive tube to extend horizontally to plug the moving contact into or extract it out of the fixed contact so that the isolating switch can be opened or closed. After the opening, a horizontal insulating break will be formed.

■ 主要特点 Main characteristics

① 性良的导电系统

导电部分采用高导电率铝合金型材制成，导电性能好，机械强度高、重量轻、防腐蚀能力强。

导电管折叠部位电流通过软连接传输，没有活动接点，导电可靠，实现少维护、免检查及长期可靠运行。

① Superior conductance system

The conductive part made of Al-alloy of high conductance rate is characteristic of good conductance, high mechanical strength, light weight and strong corrosion resistance.

The current will pass through the foldable area of the conductive arm via soft connection (without any movable contacts) to ensure reliable conductance, few maintenance, no examination, and long-term reliable operation.

② 先进的结构

隔离开关采用单臂折叠伸缩结构，传动部件及平衡弹簧均密封在导电管内，减少自然环境对产品的影响，外形紧凑简洁。

传动基座采用连杆结构，与采用伞齿轮的产品相比结构简单，调整方便。

② State-of-art structure

The disconnect switch is in the single-arm, foldable and telescopic structure. The driving elements and balancing springs are sealed within the conductive tube to reduce their adverse effects on natural environment and render the appearance compact and simple.

The drive base adopts a link lever. Compared with angular wheels, the product is simpler and easier to adjust.

③ 简单有优的接地开关

363kV及以上接地开关为单臂立开式结构，触头为插入式，结构简单。分、合闸时接地导电杆分两步动作，合闸时，接地导电杆从水平向上转动并至静触头处，再向上直动插入梅花触头中，接触可靠，承受短路电流能力强。

梅花触指
Quincuncial contact finger

静触头
Fixed contact

③ Simple and superior grounding switch

363kV earthing switch is in the single-arm standing and openable structure, with the structurally simple plug-type contact. The conductive rod for grounding will move in two steps at the moments of opening and closing. At the moment of opening, the conductive rod will rotate vertically and rise up to the static contact, and then automatically plug itself into the star-shaped contact. By doing so, the contact will be made reliable and be able to sustain heavy short-circuit current.

④ 插入式触头

动触头采用插入式，具有自清扫能力。126、252kV的静触头中的U形触指一端固定在触头座上，形成固定连接，保证可靠导通；另一端通过外压式弹簧及触指自身弹力对动触头产生接触压力，短路电流通过时自动增加触头夹紧力，触指弹簧不腐蚀、不渗漏。弹簧材质并有绝缘隔垫，弹簧不锈钢不分流。

动触头上装有引弧触头，使隔离开关具有良好的开合母线转换电流及电容、电感小电流的性能。

④ Plug-type contact

The moving contact is the plug-type and has the self-cleaning ability. One end of the U-shaped finger of 126kV and 252kV fixed contact is fixed onto the contact base, forming a fixed connection and ensuring the reliable conduction; while the other end will produce contact pressure on the moving contact as a result of the influence of external spring and the own elastic force of the contact finger, and the gripping force will automatically increase when the short-circuit current passes through the contact. The contact spring is made of stainless steel and is equipped with insulating gasket. The spring will not corrupt nor shunt. The arc contact can be mounted onto the movable and fixed contacts to enable the disconnect switch to switch current, capacitive and inductive current by opening and closing bus line.

引弧触头
Arc strike contact

■ 主要技术参数Key technical parameters

项目 Item		单位 Unit	参数 parameters				
产品型号Product model			GW23B-126DG/W	GW23B-252DG/W	GW23B-363DG/W	GW23B-550DG/W	GW23B-420DG/W
额定电压Rated voltage		kV	126	252	363	550	420
相对地及相间工频耐受电压（有效值）AC 1 min power frequency withstand voltage (effective value)	对地 / 相间 To earth / phase to phase		230	460	510	740	520
	开关断口 Across switching device		230(+70)	460(+145)	510(+210)	740(+315)	610
接地开关合闸过程中的最短距离时 Minimum distance during switching on of earthing switch			164	291	419	675	484
b)额定雷电冲击耐受电压(峰值) b)Rated lightning surge withstand voltage (peak value)	对地 / 相间 To earth / phase to phase	kV	550	1050	1175	1675	1425
	开关断口 Across switching device		550(+100)	1050(+200)	1175(+295)	1675(+450)	1425(+740)
c)额定操作冲击耐受电压(峰值) C)Rated switching impulse withstand voltage (peak value)	对地 / 相间 To earth / phase to phase		—	—	1425 / 950	1950 / 1300	1575 / 1050
	开关断口 Across switching device		—	—	850(+295)	1175(+450)	900(+345)
额定频率Rated frequency		Hz	50/60	50/60	50/60		50/60
额定电流Rated current		A	1250,2000, 3150,4000	1600,2000/2500, 3150,4000,5000	4000,5000	4000	3150
额定峰值耐受电流Rated peak withstand current		kA	125	125/160	160		160
额定短时耐受电流Rated short-time withstand current			50	50/63	63		63
额定短路持续时间Duration of rated short circuit current		s	3	3	3		3
额定端子机械负荷 Rated terminal mechanical load	水平纵向Horizontal & longitudinal	N	1250	1500	2500	4000	2000
	水平横向Horizontal & transversal		750	1000	2000	2000	660
	垂直力Vertical force		1000	1250	1500	2000	1500
隔离开关母线转换电流开合能力[2] Bus-transfer current switch capability[2]			100V, 1600A, 100次	300V, 1600A, 100次	400V, 1600A, 100次		300V, 1600A, 100次
接地开关感应电流开合能力[3] Induced current switching capability of earthing switch[3]	电磁感应电流/电压 Electromagnetic induction current (current/voltage)	A/kV	100/6 (80/2)	160/15 (80/2)	1250/35 (160/10)	1250/35 (160/20)	160/10(80/2)
	静电感应电流/电压 Electrostatic induction current (current/voltage)	A/kV	5/6 (2/6)	10/15 (3/12)	50/50 (10/17)	50/50 (25/25)	16/20 (10/25)
	开合次数Time of opening and closing	次	10	10	10		10

Kawara Trade S.A

隔离开关小电流开合能力 Opening and closing capacity of disconnect switch low current	电容电流Capacitance current	A	1	1	1	2	1
	电感电流Inductive current	A	0.5	0.5	0.5	1	0.5
无线电干扰电压Radio interference voltage		μV	≤500	≤500	≤500		≤500
爬电距离Creepage distance		mm	3150/3406	6300/7812	≥9450	≥13750	≥10500
机械寿命（级）Mechanical life (level grade)		次	5000	10000	5000	10000	10000
适用海拔高度Applicable altitude		m	≤2000	≤2000	≤3000	≤1000	≤1000
电动机操动机构 Electromotor operation mechanism	型号Model		SRCJ7	SRCJ3	SRCJ2		SRCJ2
	电机电压Motor voltage	V	AC380/DC220	AC380/DC220	AC380/DC220		AC380/DC220
	控制回路电压 Control voltage	V	AC220/DC220/DC110		AC220/DC220/DC110		AC220/ DC220/DC110
	分、合闸时间Operating time	s	10 ± 1	12 ± 1	16 ± 1		16 ± 1
	输出转角Output angle		135°	135°	180°		180°
人力操动机构 Manual operation mechanism	型号Model		CS11	SRCS	——		——
	控制回路电压Control voltage	V	AC220	AC220	——		——

注：(1)绝缘水平为DL/T593的最高等。

(2)括号外参数为DL/T486中的规定值，括号内为GB1985-2004中的规定值。GW238-363、550的参数为实验室达到参数，高于DL/T486的规定值。

(3)正常情况下，只需双母线及旁路母线的母线隔离开关，在操作时才需要开合母线环流电流；单母线、母联及变电站中大型接线隔离开关，不必要具有开合母线环流电流的性能。

Note: (1) The insulation level is the highest grade of DL/T593.

(2) The parameters outside the bracket are the B type specified values of DL/T486 and the parameters inside the bracket are the B type specified values of GB1985-2004. The parameters of GW238-363, 550 are parameters achieved in practical tests, which are higher than the B type specified values of DL/T486.

(3) In normal conditions, only busbar disconnect switch of double busbar and by-pass busbar requires busbar opening and closing converting current; the disconnect switch of single busbar, buscouple and circuits of converting station does not need function of busbar opening and closing converting current.

订货须知 Ordering Instructions

① 订货时请注明产品型号、额定电压、额定电流、额定短时耐受电压、爬电距离等；

② 单静触头隔离开关附装接地开关的方式（静触头侧接地、动触头侧接地、双接地）；双静触头隔离开关附装接地开关方式（单边接地、双边接地、边中接地、三接地）。

③ 操动机构型号、电机电压、控制电压及辅助开关接点数。

④ 当本隔离开关用于同塔双回路平行架空输电线路中变电站进出线端时，其附装的接地开关若需要开合感应电流。请特别说明，并且说明要求的参数及接地开关装在哪侧。(特别提示：并非变电站中所有接地开关和隔离开关附装的接地开关，都需要开合感应电流。)

① Product model, rated voltage, rated current, rated shorttime withstand voltage and creep distance, etc shall be specified when ordering our products

② The method of earthing switch installation of single fixed contact disconnect switch (fixed contact side earthing, moving contact side earthing, double earthing), the method of earthing switch installation of double fixed contact disconnect switch (unilateral earthing, bilateral earthing, side earthing, three earthing).

③ Model of operation mechanism, motor voltage, control voltage and auxiliary switch contact number.

④ When the disconnect switch is used on the input & output end terminal of converting station of double circuit parallel overhead transmission line, if its attached earthing switch requires opening and closing induction current, special specifications, required parameters and the side to install earthing switch shall be provided. (PS: Not all the earthing switches and disconnect switches require opening and closing induction current.)

JW10系列户外高压交流接地开关

JW10 Series Outdoor HV AC Earthing Switch

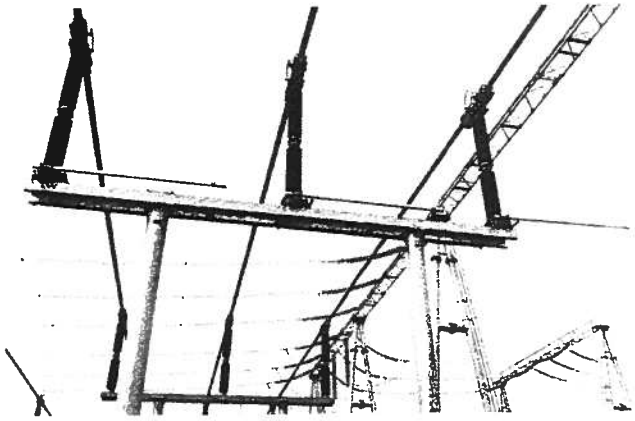

概 述 Overview

JW10系列高压交流接地开关是三相交流频率50Hz/60Hz的户外高压输电设备，用于释放被检修线路和设备的静电荷，对检修的母线与断路器等高压设备实行电气安全接地，使线路中有明显可见的接地开合标志，保证停电检修人员的人身安全。通常在采用单柱垂直断口隔离开关的场所，用它对上落母线进行接地。

JW10系列接地开关可以附装在GW4C、GW6B、GW7B、GW22B、GW23B等型号的隔离开关上，也可以构成独立的接地开关。JW10-126、145、252型采用SRCS型人力操动机构或SRCJ3型电动机操动机构进行单根操作，也可实现三根电气联动。

本接地开关加装辅助回路、引弧触头后具有高于国家标准及行业标准B类规定的开合感应电流的能力，适用于同塔双回路平行架空输电线路中变电站进出线端接地。

本产品符合GB1985《高压交流隔离开关和接地开关》、DL/T486《高压交流隔离开关和接地开关》及GB/T11022、DL/T593《高压开关设备和控制设备标准的共用技术要求》等标准，同时满足国家电网公司为完善化而颁布的《关于高压隔离开关订货的有关规定》，通过全套型式试验，并且进行了9度烈度耐地震的计算分析。

本接地开关通过了中国机械工业联合会组织的新产品国家技术鉴定。鉴定认为："产品结构和性能满足隔离开关国标要求，产品性能指标达到国际同类产品的先进水平"。

JW10 series high voltage alternating earthing switch is an outdoor high voltage power transmission equipment of three phase alternating frequency 50Hz/60Hz, which is used to release electrostatic charge of the inspected circuit and equipment and conduct electric safe earthing of inspected busbar and high voltage equipments such as breakers to make earthing opening and closing symbol visible in the circuit and guarantee the personal safety of maintenance personnel. It is generally used in places where single pole vertical fracture disconnection switch is

adopted to ground the upper level busbar

JW10 series earthing switch can be attached on disconnect switches such as GW4C, GW6B, GW7B, GW22B and GW23B. It can also form independent earthing switch. JW10-126, 145, 252 model adopts SRCC type manual operation mechanism or SRCJ3 type electromotor operation mechanism to conduct tripolar link operation. JW10-363, 550 model earthing switch uses SRCJ2 type electromotor operation mechanism to conduct single pole link operation. It can also realize tripolar electric link

The earthing switch possesses the capacity of opening and closing induction current which meeting the national standard and B Grade of the industrial standard, which is applicable to the input & output end terminal earthing of converting station of double circuit parallel overhead transmission line.

The product meets GB1985 High Voltage Alternating Disconnecting Switch and Earthing Switch, DL/T486 High Voltage Alternating Disconnecting Switch and Earthing Switch and GB/T11022. DL/T593 Common Technical Requirements of High Voltage Switch Equipment and Control Equipment Standards. It also meets Related Regulations on High Voltage Disconnecting Switch Ordering which is issued to complete the State Grid Corporation of China. It has passed the whole test and conducted 9*intensity quake proof calculation and analysis.

The earthing switch has passed the national technical appraisement of new products organized by China Mechanical Industry Association. The appraisement shows that the product structure and functions meet the complete requirements of disconnecting switch. The product performance reaches the advanced level of world similar products.

■ 结构简述 Structure Overview

JW10系列接地开关由三个单极及操动机构组成。每个单极包括底座、支柱绝缘子及接地导电杆几部分，接地导电杆安装在底座上，静触头安装在支柱绝缘子顶部。

操动机构通过传动元件带动接地导电杆由水平位置向上摆动，下入或插入静触头中，实现接地开关合闸，分闸动作相反。

JW10 series earthing switch is composed of three single pole and operation mechanism. Each single pole includes foundation, support insulator and earthing conducting rod. The earthing conducting rod is installed on the foundation and the fixed contact is installed on the top of support insulator.

The operation mechanism snaps in or inserts in the fixed contact to realize switching on of earthing switch through driving element driving the earthing conducting rod to swing upward. The switching off operation is on the contrary

■ 主要特点 Main Features

导电臂采用高强度铝合金型材制成，导电性能好，机械强度高，重量轻，防腐性能力强。

The conductive arm is made of high strength aluminum alloy sections, which has good electrical conductivity, high mechanical strength, light weight and strong anti-corrosion capacity.

可靠的触头结构

JW10-126、252型接地开关为一步动作式结构，触头为卡入式，结构简单，维护方便。本结构有效利用电动力来夹紧触头以及使地刀保持在合闸位置，故具有优异的承受短路电流的能力。同时具有开合符合GB1985国家标准规定B类感应电流的能力，增设引弧触头后，同具有开合符合DL/T486电力行业标准B类感应电流的能力。

Reliable contact structure

JW10-126 type earthing switch is one-step movement structure with inserted contact which is simple in structure and convenient in maintenance. The structure makes effective use of electrodynamic force to intensify the contact and keep the earthing knifeswitch on the switching on location, which possesses good capacity of bearing short circuit current. It is also in possession of the capacity of B grade induction current which meets GB1985 national standard. After installing arc strike contact, it will be in possession of the capacity of B grade induction current which meets DL/T486 electric industry standard.

JW10-363、550型接地开关为单臂立开式结构，触头为插入式，结构简单。接地导电杆分合闸时为两步动作，合闸时，从水平向上转动升至静触头处，再向上直动插入梅花触头中，接触可靠，承受短路电流能力强。

加装辅助回路及真空开关后，其开合感应电流的参数达到国内领先水平：电磁感应电流：1250A,35kV；静电感应电流：50A，50kV。

JW10-63, 550 type earthing switch is in single arm vertical & open type with inserted type contact which is simple in structure. Two-step movement is required in switching on of earthing conductive rod. When switching on, rotate the switch upward to the fixed contact and direct act to insert into the quincuncial contact. The contact is reliable and the capacity of bearing short circuit current is strong.

After installing subsidiary loop and vacuum switch, its parameters of opening and closing induction current reach the domestic leading level: electromagnetic induction current: 1250A, 35kV; electrostatic induction current: 50A, 50kV.

梅花触指
Quincuncial contact finger

静触头
Fixed contact

■ 主要技术参数 Key technical parameters

项目 Item		单位 Unit	参数 Parameters							
产品型号Product model			JW10－40.5	JW10－72.5	JW10-126/145	JW10－170	JW10-252/363	JW10-363/550	JW10-550/363	JW10-550/252
额定电压Rated voltage		kV	40.5	72.5	126/145	170	252	363	550	420
a)1min工频耐受电压(有效值) A) 1 min power frequency withstand voltage (effective value)	对地／相间 To earth / phase to phase		110	180	230/275	275	460	510	740	520
b)额定雷电冲击耐受电压(峰值) B) rated lightning surge withstand voltage (peak value)	对地／相间 To earth / phase to phase	kV	160	380	550/650	650	1050	1175	1675	1425
c)额定操作冲击耐受电压(峰值) C) rated switching impulse withstand voltage (peak value)	对地／相间 To earth / phase to phase		—	—	—	—	—	1425/950	1950 / 1300	1175/780
额定频率Rated frequency		Hz	50/60	50/60	50/60	60	50/60	50/60		50/60
额定峰值耐受电流Rated peak withstand current		kA	125	125	125	104	160	160		160
额定短时耐受电流Rated short-time withstand current			50	50	50	40	50/63	63		63
额定短路持续时间Duration of rated short circuit current		s	4	4	3	3	3	3		2
额定端子机械负荷 Mechanical load of rated terminal	水平纵向Horizontal & longitudinal	N	1000	1000	1000/1250	1250	1500	2500	4000	4000
	水平横向Horizontal & transversal		750	750	750	750	1000	2000	2000	1600
	垂直力Vertical force		750	750	1000	1000	1250	1500	2000	1500
接地开关感应电流开合能力* Induced current switching capability of earthing switch [7]	电磁感应电流（电流/电压） Electromagnetic induction current (current/voltage)	A/kV	100/4	100/4	100/6 (80/2)	100/6 (80/2)	160/15 (80/2)	1250/35 (160/10)	1250/35 (160/20)	160/20(80/2)
	静电感应电流（电流/电压） Electrostatic induction current (current/voltage)	A/kV	2/6	2/6	5/6 (2/6)	5/6 (2/6)	10/15 (3/12)	50/50 (18/17)	50/50 (125/25)	18/20 (1.25/5)
	开合次数Time of opening and closing	次 Times	10	10	10			10		10
无线电干扰电压Radio interference voltage		μV	≤500	≤500	≤500	≤500	≤500	≤500		≤500
爬电距离Creep distance		mm	1256	1815/2248	3625/4488	4250,5270	6300,7812	≥9450	≥13750	≥10500
机械寿命（M级）Mechanical life (M grade)		次	5000	5000	5000	2000	5000	5000		10000
适用海拔高度Applicable altitude		m	≤2000	≤2000	≤2000	≤2000	≤2000	≤3000	≤1000	≤1000

	型号Model		SRCI3	SRCJ7
电动机操动机构 Electromotor operation mechanism	电机电压Motor voltage	V	AC380/DC220	
	控制回路电压Control voltage	V	AC220/DC220/DC110	
	分、合闸时间Operating time	s	12 ± 1	16 ± 1
	输出转角Output corner		135°	180°
人力操动机构 Manual operation mechanism	型号Model		SRCS	——
	控制回路电压Control voltage	V	AC220	——

注：(1)绝缘水平为DL/T593的最高等级。

(2)括号外参数为DL/T486的B型规定值，括号内为GB1985-2004的B型规定值。JW8-363、550的参数为实际试验达到参数，高于DL/T486的B型规定值。

Note: (1) The insulation level is the highest grade of DL/T593.

(2) The parameters outside the bracket are the B type specified values of DL/T486 and the parameters inside the bracket are the B type specified values of GB1985-2004. The parameters of GW2B-363, 550 are parameters achieved in practical tests, which are higher than the B type specified values of DL/T486.

■ 订货须知Ordering Instructions

◇ 订货时请注明产品型号、额定电压、额定电流、额定短时耐受电压、爬电距离等。

◇ 126 & 252kV接地开关指明布置方式——并列式或一列式。

◇ 接地开关如果需要开合感应电流，请特别说明，并注明要求开合感应电流的参数值。对隔离开关必须指明所装的哪一侧接地开关需要开合感应电流。（特别提示：只有驾塔双回平行输电线路中两端变电站的进出线侧所用的接地开关，才应具有开合感应电流的功能，而这只是少数。并非变电站中所有接地开关和隔离开关附装的接地开关，都需要开合感应电流。）

◇ 操动机构型号、电机电压、控制电压及辅助开关接点数。

◇ Product model, rated voltage, rated current, rated shortime withstand voltage and creep distance, etc shall be specified when ordering our products.

◇ Arrangement method of 126~252 kV earthing switch shall be specified - parallel type or one column type.

◇ If the earthing switch requires opening and closing induction current, special specifications and required parameters of opening and closing induction current shall be provided. The side of earthing switch which requires opening and closing induction current of the disconnect switch shall be specified. (PS: Only earthing switches used in the input & output circuit of converting station of two circuit parallel transmission line require the function of opening and closing induction current, which is only a minority. Not all the earthing switches and disconnect switches require opening and closing induction current.)

◇ Model of operation mechanism, motor voltage, control voltage and auxiliary switch contact number.

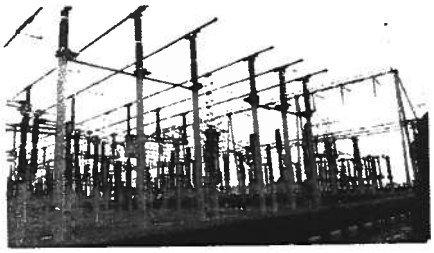

JW10-252（G·W）型接地开关（一列式布置）在运行

JW10-252 (G-W) type earthing switch (one column type) is running.

GW$^{8}_{13}$系列中性点隔离开关

GW$^{8}_{13}$Series Neutral Point Disconnec Switch

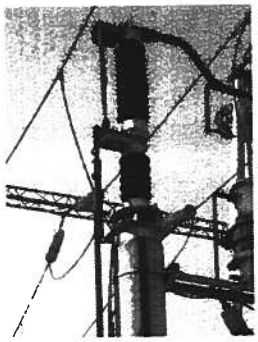

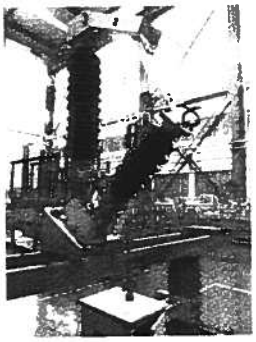

■ 概 述 Overview

GW8、GW13系列中性点隔离开关是交流50Hz的户外装置，供在无载荷情况下，分、合变压器中性点联线之用。

GW13型可用CJ2型电动操动机构或CS17G/CS14G型人力操动机构操作；GW8型可用CJ2型电动操动机构或CS14G型人力操动机构操作。

GW8/GW13系列中性点隔离开关，由一个单极及操动机构组成。单极包括底座、支柱绝缘子、导电臂、触头等部分。操动机构通过连杆驱动导电臂实现隔离开关分、合闸。

GW8, GW13 series neutral point disconnect switch is an outdoor device of alternating 50Hz which is used in separating and combining neutral points under no load conditions.

GW13 type can use CJ2 type motor-driven operation mechanism or CS17G/CS14G type manual operation mechanism to operate. GW 8 type can useCJ2 type motor-driven operation mechanism or CS14G type manual operation mechanism to operate.

GW8/GW13 series neutral point switch is composed of a single pole and operation mechanism. The single pole includes foundation, support insulator, conductive arm and contact, etc. The operation mechanism realizes switching on/off of disconnect switch through connecting rod driving conductive arm.

■ 主要特点 Main Features

◇ GW8、GW13型均经过结构改进，提高了额定电流及短时耐受电流参数。

◇ 导电臂采用矩形铝合金制成，强度高、质量轻、散热面积大。防腐性能好。

◇ 采用特殊铜合金制成自力型触指。依靠触指自身的弹力夹紧触头，避免因弹簧锈蚀。发热造成火花引起触头交流力降低。接触电阻增加。触头发热加剧的恶性循环，且触指与触头座采用螺栓固定连接，避免松动。反之进入接触点，使接触电阻稳定。触头采用铜板弯成，分合过程中与触指摩擦行程短、操作力小。此导电结构已获国家实用新型专利。

◇ 转动部分按照免维护要求设计。转动座设计成密封结构，水汽、尘埃、有害气体无法进入，轴承在良好的环境中工

件，并采用2号低温润滑脂，使轴承不生锈、润滑脂不流失不干涸。各转动摩擦处均采用不锈钢轴销与无油自润滑轴承相配合的结构，钢制件采用热镀锌工艺，确保隔离开关操作灵活、工作可靠、免维护。

GW8 and GW13 type have been improved in structure, so that the rated current and shorttime withstand current parameters have been improved.

The conductive arm is made of rectangular aluminum alloy, which has high strength, light weight, large heat dissipation area and good anti-corrosion function

self-reliance contact finger is made of special copper alloy. The self-owned elastic clamping contact will prevent the vicious circle of contact clamp force reducing, contact resistance increasing and contact heating caused by spring corrosion and heat annealing. The contact finger and the contact foundation is fixed and connected with bolts to prevent the contact point from oil and dust and stabilize the contact resistance. The contact is bended by copper plate, which has short friction distance and small operation force with the contact finger. This conductive structure has been a national utility model patent.

The rotation part is designed according to the requirements of maintenance-free. The rotation foundation is designed as the sealed structure. The stream, dust and hazardous gases cannot enter. The bearings are working under good environment. No.2 low temperature lubricating grease is used to prevent the bearings from corrosion and the lubricating grease from loss and dry. Cooperation structure of stainless steel dowel and oil-free self-lubricating bearing are adopted in each rotation friction parts. The steelwork adopts hot galvanizing technique to guarantee the disconnect switch flexible, reliable and maintenance-free.

■ 主要技术参数Key technical parameters

项目 Item		单位 Unit	参数 Parameters					
产品型号Product model			GW8			GW13		
额定电压Rated voltage		kV	40.5	72.5	126	40.5	72.5	126
1min工频耐受电压 1 min power frequency withstand voltage		kV	85	140	230	85	160	230
雷电冲击耐受电压 Rated lightning surge withstand voltage		kV	185	325	550	185	350	550
额定电流Rated current		A	630			630,1250,1600		
额定短时耐受电流 Rated shorttime withstand current		kA/S	25/4			40/4		
额定峰值耐受电流 Rated peak withstand current		kA	63			100		
额定端子机械负荷（水平） Mechanical load of rated terminal level		N	750	750	1000	750	1000	1250
电动机操动机构 Electromotor operation mechanism	型号Model		CJ2			CJ2		
	电机电压 Motor voltage	V	AC380、DC220、DC110			AC380、DC220、DC110		
	控制回路电压 Control voltage	V	AC220、AC380、DC220、DC110			AC220、AC380、DC220、DC110		
	分、合闸时间 Operating time	s	7±1			7±1		
	输出转角 Output corner		180°			180°		
人力操动机构 Manual operation mechanism	型号Model		CS14G			CS14G		
	控制回路电压 Control voltage	V	AC220			AC220		

■ 订货须知 Ordering Instructions

1. 订货时请注明产品型号、额定电压、额定电流、额定短时耐受电流、爬电距离等。
2. 操动机构型号、名称、电机电压、控制电压及辅助开关接点数。

1. Product model, rated voltage, rated current, rated shorttime withstand current and creep distance, etc shall be specified when ordering our products.
2. Model of operation mechanism, motor voltage, control voltage and auxiliary switch contact number.

SR-JXB系列变压器中性点过电压保护装置
SR-JXB Series Transformer Neutral Point Overvoltage Protection Device

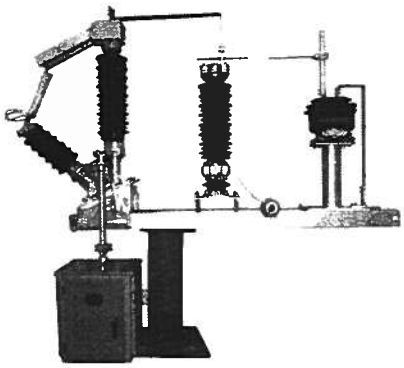

■ 概 述 Overview

SR-JXB系列变压器中性点过电压保护装置，专用于110kV、220kV电力变压器中性点回路，保护变压器中性点绝缘免受过电压的损坏，并可实现变压器中性点接地运行或不接地运行两种运行方式的转换。

由于电力系统运行的需要，我国110～220kV有效接地系统的变压器中性点大部分采用不接地运行方式，而变压器一般采用分级绝缘结构，绝缘水平相对较低，所以不接地运行的变压器中性点需要采取对雷电过电压的保护。

目前，中性点过电压保护主要采用间隙保护、避雷器保护、间隙与避雷器并联保护三种方式。间隙保护主要限制工频过电压、操作过电压及谐振过电压，同时对雷电过电压也有一定的抑制作用；氧化锌避雷器保护主要是限制雷电过电压；兼同时防护雷电、工频和操作过电压时，可采用间隙与避雷器并联保护方式。此时，间隙既保护变压器中性点绝缘，又保护避雷器，并防止避雷器因通流量不够发生爆炸。

SR-JXB Series Transformer Neutral Point Overvoltage Protection Device is specially used in 110kV, 220kV transformer neutral point return circuit, which will prevent the neutral point insulation from overvoltage damage, and realize the conversion of earthing running and earthing-free running of transformer neutral point.

Required by the operation of electric power system, most transformer neutral points of 110~220kV effective earthing system adopts earthing-free operation method. The transformer mainly adopts grading insulation structure, whose insulation level is relatively low. So lightening overvoltage, operation overvoltage and work frequency transient overvoltage protection shall be adopted in earthing-free transformer neutral points.

Presently, the neutral point overvoltage protection mainly adopts protective gap, arrester protection and parallel connection protection of gap and arrester. The protective gap mainly restricts work frequency overvoltage, operation overvoltage and resonance overvoltage. It can also restrict lightening overvoltage to some extent. Zinc oxide arrester protection can mainly restrict lightening overvoltage when it is required to protect lightening, work frequency and operation overvoltage, the parallel connection protection of gap and arrester can be adopted. At this moment, the gap can protect both the neutral point of transformer and the arrester. It can also prevent the arrester from explosion because of insufficient flow.

结构简述 Structure Overview

SR JXB系列变压器中性点过电压保护装置，根据不同需要，将中性点隔离开关、保护间隙、避雷器、电流互感器等元件组装在一个底架上。

中性点过电压保护装置原理接线图如图所示：

SR-JXB series transformer neutral point overvoltage protection device can have the neutral point disconnect switch, protective gap, arrester and current transformer installed on the same foundation.

The wiring diagram of neutral point overvoltage protection device is as follows:

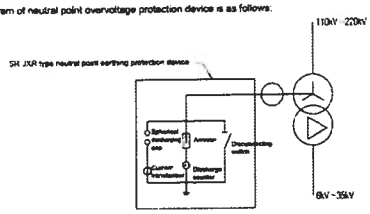

Wiring diagram of neutral point overvoltage protection device

主要特点 Main Features

◎ 成套性、功能全：SR-JXB系列中性点过电压保护装置是集隔离开关、氧化锌避雷器、放电间隙和电流互感器等为一体的成套设备。具有功能全、体积小、便于安装调试、可靠性高等特点。产品严格按照GB311.1-1997《高压输变电设备的绝缘配合》、DL/T620-1997《交流电气装置的过电压保护和绝缘配合》及"国家电网公司十八项电网重大反事故措施"和国家相关标准进行设计和制造。

◎ 特性稳定有效保护：SR-JXB系列中性点过电压保护装置采用不锈钢半球形的棒形间隙，特性稳定、与避雷器特性和变压器的绝缘配合精确、自热容量大、不易烧毁，提高了保护的安全性、可靠性和保护效果。

◎ 组合灵活使用方便：SR-JXB系列中性点过电压保护装置的放电间隙、避雷器、隔离开关，可根据工程需要任意选配组合。用户可选用纯间隙方案，也可选用隔离开关与放电间隙组合方式，还可以选用隔离开关、放电间隙与避雷器并联工作的方案。隔离开关可选用GW8型或GW13型，操动机构可选手动或电动。间隙的技术参数可以在工厂调试完成，亦可在现场很方便地进行校正调试。

◎ 防腐性能好：电极采用不锈钢制成，装置底座采用热镀锌处理，隔离开关操动机构箱体及互感器箱体均采用不锈钢板制成。

◎ Complete set and functions: SR-JXB series neutral point overvoltage protection device is a whole set of devices which combines disconnect switch, zinc oxide arrester, discharging gap and current transformer. It possesses the functions such as complete functions, small volume, convenient installation and debugging and high reliability. The product is designed and manufactured according to GB311.1-1997 Insulation Cooperation of High Voltage Power Transmission and Transformation, DL/T620-1997 Overvoltage Protection and Insulation Cooperation of Alternating Electric Device, "18 Significant Anti-accident Measures of State Grid Corporation of China" and related national standards.

◎ Stable features and effective protection: SR-JXB series neutral point overvoltage protection device adopts stainless steel hemispherical clavate gap with stable features, which can cooperate with the arrester and the insulation of transformer accurately. It has large heat capacity, uneasy to be burnt up and increases the safety, reliability and protection effect.

◎ Flexible combination and convenient usage: The discharging gap, arrester and disconnect switch of SR-JXB series neutral point overvoltage protection device can be selected and combined according to the requirements. The user can select the pure gap proposal, or the combination of disconnect switch and discharging gap, or the parallel connection of disconnect switch, discharging gap and arrester. The disconnect switch can select GW8 or GW13 type. The operation mechanism can select manual or motor-driven. The technical parameters of gap can be debugged in the factory, or regulated on site, which is very convenient.

◎ Good anti-corrosion function. The electrode is made of stainless steel. The foundation of the device adopts hot galvanizing treatment. The operation mechanism box of disconnecting switch and mutual inductor box are both made of stainless steel.

主要技术参数 Key technical parameters

产品型号 Product model	变压器中性点绝缘水平 Transformer neutral point insulation level: 变压器额定电压 Rated voltage of the transformer	变压器中性点全波雷电冲击耐受电压峰值 Lightning surge full wave clipping withstand voltage (peak value)	短时工频耐受电压(有效值) Short-time work frequency withstand voltage (effective value)	隔离开关 Disconnecting switch: 型号 Model	额定电流 Rated current	操动机构 Operation mechanism	氧化锌避雷器 Zinc oxide arrester: 型号 Model	额定电压 Rated voltage	持续运行电压 Continuous operation voltage	电压(不小于)直流1mA参考 Voltage (no less than) DC 1mA reference	电流为10kA峰值8/20μs雷电冲击的残压(峰值) Current residual voltage (peak value) 8/20μs lightning surge	放电间隙 Discharge gap: 电压工频放电 Voltage work frequency discharge 10±%(有效值) 10±% (effective value)	电流互感器 Current transformer: 型式 Type	变比 Ratio of transformation
	kV	kV	kV		A			kV	kV	kV	kV	kV		
SR-JXB-110	110	250	95	GW8/13-72.5	630	CS14G/CS11(手动)或CJ2(电动) CS14G/CS11 (manual) or CJ2(motor-driven)	YI 5W-72/186	72	58	103	186	83	全封闭浇注式环氧树脂浇注 Whole-sealing post type epoxy resin pouring 10kV	200/5
SR-JXB-220	220	400	200	GW8/13-126			YI.5-144/320	144	116	205	320	166		

订货须知 Ordering Instructions

◎ 变压器中性点电流互感器一般装在变压器出线套管上，不包括在本装置内。

◎ 订货时请注明组合方式：1、纯间隙方式 2、隔离开关与放电间隙组合 3、隔离开关、避雷器、放电间隙组合

◎ 请知变压器额定电压；电流互感器变比；隔离开关型号、额定电压、额定电流、额定短时耐受电流、爬电距离及操动机构型号、电机电压、控制电压、辅助开关接点数；避雷器额定电压及其他参数。

◎ The neutral point current transformer is generally installed on the wiring sleeve of the transformer, which is not included in this device.

◎ The combination method shall be specified when ordering the products: 1. Pure gap method; 2. Combination of disconnect switch and discharge gap; 3. Combination of disconnecting switch, arrester and discharge gap.

◎ The rated voltage of the transformer, the ratio of transformation of current transformer, the model, rated voltage, rated current, rated short-time withstand current, creep distance of the disconnect switch, the model of operation mechanism, the motor voltage, control voltage, auxiliary switch contact number, the rated voltage of arrester and other parameters shall be specified.

户外隔离开关电动机操动机构

Outdoor Disconnect Switch Electromotor Operation Mechanism

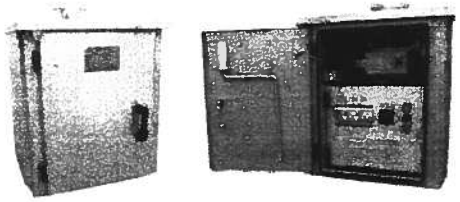

CJ2、SRCJ2、SRCJ3、SRCJ8型电动机操动机构外形

Appearance of SRCJ2, SRCJ3, SRCJ8 type electromotor operation mechanism

■ 概 述 Overview

CJ2、SRCJ2-3、SRCJ7、SRCJ8型电动机操动机构，属户外产品，供操动高压隔离开关和接地开关之用，可进行远方操作，也可以进行就地电动操作，或者利用手柄进行人力操作。人力与电动操作之间设有闭锁装置，以保证安全。

CJ2, SRCJ2-3, SRCJ7, SRCJ-8 type electromotor operation mechanism are outdoor product used in operation high voltage disconnect switch and earthing switch, which can conduct remote control, or locally motor-driven operation or manual operation by handle. Fastener is installed between manual and motor-driven operation to guarantee the safety.

■ 结构简述 Structure Overview

电动机操动机构由电动机通过双蜗轮蜗杆减速装置将力矩传递给机构输出轴。机构内设有电气控制、保护及信号传输装置，并设有人力操作及相关闭锁设施。

The electromotor operation mechanism uses electromotor to pass the torque to the output shaft through double worm gear reduction gear. Electrical control, protection and signal transmission devices, manual operation and related fasteners are installed in the mechanism.

■ 主要特点 Main Features

操动机构是隔离开关和接地开关的驱动元件，是隔离开关和接地开关重要的组成部分。长期运行实践表明，操动机构的可能很大程度上影响隔离开关运行的可靠性。

如高公司坚持不懈努力，不断优化电动机操动机构的结构和性能。

如高公司生产的电动机操动机构，具有十大特点：

(1) 箱体采用优质不锈钢板整装而成，无焊缝，外形美观，还可避免焊缝生锈；箱顶制成斜坡，不积水。

(2) 箱体密封防雨，箱内设有除湿防潮加热器和通风窗。

(3) 机构的核心部件采用引进意大利德西包铭减速机制造技术生产的双蜗蜗轮蜗杆减速箱，性能优，结构紧凑，效率高，运行平稳，噪音低，经久耐用。

(4) 电器元件采用施耐德、菲尼克斯、ABB等著名厂家生产的高档产品，确保工作可靠。

(5) 机构采用积木式原理，可按用户要求组成不同输出转速及转角的规格。

(6) 电动机具有短路、过载和缺相保护。

(7) 箱体正面和侧面均有箱门，便于维护和检修。机构箱的正门装有活动控制面板，电器元件均安装在面板上，便于接线和检修。交流接触器直立安装，工作状态良好。

(8) 用户可在机构箱门上挂装机械锁或电脑锁。

(9) 机构闭锁功能齐全，SRCJ2、SRCJ3、SRCJ8型利用中间继电器实现手动与电动之间的闭锁，还可实现：当系统不允许操作时，既不能电动操作，也不能手动操作，有效防止误操作发生。

(10) 根据用户要求，对单级操作的隔离开关可以实现三级电气联动。

The operation mechanism is the driven element and an important component of disconnect switch and earthing switch. Long-term operation and practice have proved that the performance of operation mechanism will influence the reliability of the operation of disconnect switch to great extent.

Rugao Company is always persisting in optimizing the structure and performance of operation mechanism of the electromotor.

The operation mechanism of the electromotor manufactured by Rugao Company has the following 10 features.

(1) The box is riveted by high quality stainless steel, which is without welding line, in good appearance and welding line corrosion free. The top of the box is made to a slope to prevent ponding.

(2) The box is sealed and rain-proof. Dehumidification moistureproof heater and ventilight are installed inside the box.

(3) The core components of the mechanism adopt twin-stage worm reduction box manufactured with the technique of Italian conical surface envelope reduction gear, which has good performance, tight structure, high efficiency, stable operation, low noise and durable.

双蜗轮蜗杆减速箱

Double worm reduction box

(4) The components adopt top grade products manufactured by famous manufacturers such as Schneider, Phoenix and ABB to guarantee reliable operation.

(5) The mechanism adopts building block principle, which can constitute different output revolving speed and corner specifications according to the requirements of the users.

(6) The electromotor has protections of short circuit, overload and open phase.

(7) Doors are installed on both the front and side of the box for the convenience of maintenance and inspection. Movable control panel is installed on the front door of the box, on which the components are installed for the convenience of wiring and inspection. The A.C. contactor is installed vertically in good working condition.

(8) The user can install a mechanical lock or computer lock on the door of the mechanism box.

(9) There shutting function of the mechanism is complete. SRCJ2, SRCJ3 and SRCJ8 type can realize the shutting between manual and power-driven by auxiliary relay. It can also realize neither power-driven operation nor manual operation when the system does not allow operations to prevent mis-operation effectively.

(10) The disconnect switch of single pole operation can realize tripolar electric linking according to the requirements of the user.

■ 主要技术参数 Key technical parameters

型号Type	CJ2	SRCJ7	SRCJ2	SRCJ3	SRCJ8
主轴转角 Principal axis corner°	180 或 90 180 or 90	135	180	135	180
额定输出力矩 N.m Rated output torque N.m	620	740	1480	1200	1700
电动机功率 W Electromotor power W	370				>50
电动机电压 V Electromotor voltage V	AC380 AC220 DC220 DC110				
控制电压 V Control voltage V	AC380 AC220 DC220 DC110				
分合闸时间 s Switching on/off time s	7 ± 1	10 ± 1	16 ± 1	12 ± 1	16 ± 1

注：分合闸时间为交流机构的数值。

Note: The switching on/off time is the value of alternating mechanism

■ 订货须知 Ordering Instructions:

订货时需注明

- 所配隔离开关型号
- 操动机构型号、转角
- 电动机电压、控制电压及辅助开关接点数
- 计数器等为特殊供货范围，需特别注明

The following parameters shall be specified when ordering the products

Model of disconnect switch

Model and corner of operation mechanism

Electromotor voltage, control voltage and auxiliary switch contact number

The counter is in special scope of supply, which shall be specified separately

户外隔离开关人力操动机构

Human Actuator of Outdoor Isolating Switch

CS14G型Type CS14G

SRCS真空辅助开关SRCS Vacuum auxiliary switch

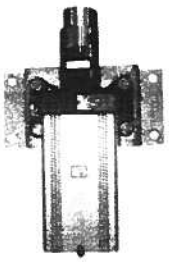

SRCS辅助开关SRCS General auxiliary switch

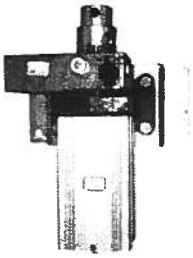

SRCS带电磁锁SRCS electromagnetic lock

隔离开关标准辑录

Standard Collection of disconnect Switch

1.额定绝缘水平Rated insulation level

(1)开关设备的额定绝缘水平（据DL/T593-2006）

(1)Rated insulation level of switch gear (according to DL/T593-2006)

表1 额定电压252kV级及以下的额定绝缘水平

Table 1 Rated insulation level for rated voltage of 252kV and below

额定电压U_r kV（有效值） Rated voltage Ur kV (effective value)	额定工频短时耐受电压U_d kV（有效值） Rated power frequency short-time withstand voltage Ud kV (effective value)		额定雷电冲击耐受电压U_p kV（峰值） Rated lightning impulse withstand voltage Up kV (peak value)	
	通用值General value	隔离断口Isolation clearance	通用值General value	隔离断口Isolation clearance
(1)	(2)	(3)	(4)	(5)
3.6	25/18	27/20	40/20	46/23
7.2	30/23	34/27	60/40	70/46
12	42/30	48/36	75/60	85/70
24	65/50	79/64	125/95	145/115
40.5	95/80	118/103	185/170	215/200
72.5	140	180	325	385
	160	200	350	410
126	185	185(+50/+70)	450	450(+70/+100)
	230	230(+50/+70)	550	550(+70/+100)
252	395	395(+100/+145)	950	950(+140/+200)
	460	460(+100/+145)	1050	1050(+140/+200)

注1：根据我国电力系统的实际，本表中的额定绝缘水平与IEC60694：2002表1(a)的额定绝缘水平不完全相同。

注2：本表中项(2)和项(4)的数值取自GB311.1，斜线下的数值为中性点接地系统使用的数值，项(2)和项(3)斜线下的数值亦为湿试时的数值。

注3：126kV和252kV项(3)中括号内的数值分别为0.7 $U_r/\sqrt{3}$和1.0 $U_r/\sqrt{3}$，是加在对侧端子上的工频电压有效值。项(5)中括号内的数值分别为0.7 $U_r/\sqrt{3}$和1.0 $U_r/\sqrt{3}$，是加在对侧端子上的工频电压峰值；括号内的数值用户可根据需要选用。

注4：隔离断口是指隔离开关、负荷一隔离开关的断口以及组联操作用或作为热备用的负荷开关和断路器的断口。

Note 1: According to the actual electric power system of our country, the rated insulation levels in this table are not identical to those of IEC60694：2002 table 1(a).

Note 2: values of item (2) and (4) in the table come from GB311.1, and values after a slash line are values used for neutral grounding system. Values after a slash line from item (2) and (4) are also values for wet test.

Note 3: Values in parentheses for item (3) at 126kV and 252kV are respectively 0.7 $U_r/\sqrt{3}$ and 1.0 $U_r/\sqrt{3}$. They are the effective frequency voltage value applied to opposite terminals. Values in parentheses for item (5) are respectively 0.7 $U_r/\sqrt{3}$ and 1.0 $U_r/\sqrt{3}$. They are the peak frequency voltage applied to opposite terminals. Users can select values in parentheses as needed.

Note 4: Isolation clearance refers to the clearances for disconnect switch, load disconnect switch as well as clearances for load switch and circuit breaker used as connection or spare.

表2 额定电压252kV以上的额定绝缘水平

额定电压U_r kV（有效值） Rated voltage U_r kV (effective value)	额定短时工频耐受电压U_d kV（有效值） Rated power frequency short-time withstand voltage U_d kV (effective value)		额定操作冲击耐受电压U_s kV（峰值） Rated switching impulse withstand voltage U_s kV (peak value)			额定雷电冲击耐受电压U_p kV（峰值） Rated lightning impulse withstand voltage U_p kV (peak value)	
	相对地及相间 Phase-to-earth and phase-to-phase	开关断口及隔离断口 Switch clearance and isolation clearance	相对地 Phase-to-earth	相间 Phase-to-phase	开关断口及隔离断口 Switch clearance and isolation clearance	相对地及相间 Phase-to-earth and phase-to-phase	开关断口及隔离断口 Switch clearance and isolation clearance
(1)	(2)	(3)	(4)	(5)	(6)	(7)	(8)
363	460	460$\begin{pmatrix}+150\\+210\end{pmatrix}$	850	1275	800 (+295)	1050	1050$\begin{pmatrix}+205\\+295\end{pmatrix}$
	510	510$\begin{pmatrix}+150\\+210\end{pmatrix}$	950	1425	850 (+295)	1175	1175$\begin{pmatrix}+205\\+295\end{pmatrix}$
550	680	680$\begin{pmatrix}+220\\+315\end{pmatrix}$	1175	1760	1050 (+450)	1550	1550$\begin{pmatrix}+315\\+450\end{pmatrix}$
	740	740$\begin{pmatrix}+220\\+315\end{pmatrix}$	1300	1950	1175 (+450)	1675	1675$\begin{pmatrix}+315\\+450\end{pmatrix}$
800	900	900$\begin{pmatrix}+320\\+460\end{pmatrix}$	1425	2420	1175 (+650)	1950	1950$\begin{pmatrix}+455\\+650\end{pmatrix}$
	960	960$\begin{pmatrix}+320\\+460\end{pmatrix}$	1550	2480	1300 (+650)	2100	2100$\begin{pmatrix}+455\\+650\end{pmatrix}$
1100	1100	1100$\begin{pmatrix}+445\\+635\end{pmatrix}$	1800	2700	1675 (+900)	2400	2400$\begin{pmatrix}+630\\+900\end{pmatrix}$

注1：根据我国电力系统的实际，本表中的额定绝缘水平与IEC60694：2002表2(a)的额定绝缘水平不完全相同。

注2：本表中项(2)、项(4)、项(5)、项(6)和项(7)根据GB311.1的数值提出。

注3：本表中项(3)括号内的数值分别为0.7 $U_r/\sqrt{3}$和1.0 $U_r/\sqrt{3}$，是加在对侧端子上的工频电压有效值；项 (6)括号内的数值为1.0 $U_r/\sqrt{3}$，是加在对侧端子上的工频电压峰值；项 (8)括号内的数值分别为0.7 $U_r/\sqrt{3}$和1.0 $U_r/\sqrt{3}$，是加在对侧端子上的工频电压峰值。

注4：本表中1100kV的数值是根据我国电力系统的需要而选定的数值。

Note 1 According to the actual electric power system of our country, the rated insulation levels in this table are not identical to those of IEC60694: 2002 table 2(a)

Note 2 Values of item (2), (4), (5), (6), and (7) in this table come from GB311.1

Note 3 Values in parentheses for item (3) of this table are respectively 0.7 $U_r/\sqrt{3}$ and 1.0 $U_r/\sqrt{3}$. They are the effective frequency voltage value applied to opposite terminals. Value in parentheses for item (6) is 1.0 $U_r/\sqrt{3}$, it is the peak frequency voltage applied to opposite terminal. Values in parentheses for item (8) are 0.7 $U_r/\sqrt{3}$ and 1.0 $U_r/\sqrt{3}$. They are the peak frequency voltage applied to opposite terminals. Users can select values in parentheses as needed

Note 4 1100kV in this table is selected according to requirements of the electric power system of our country

(2)变压器中性点接地用隔离开关的额定绝缘水平（据GB1985-2014）

(2)Rated insulation level of disconnect switch used for transformer neutral point grounding (according to GB1985-2004)

变压器中性点接地用隔离开关的额定绝缘水平

Rated insulation level of isolating switch used for transformer neutral point grounding

隔离开关的额定电压U_r/kV Rated insulation level of isolating switch U_r/kV	变压器的中性点接地方式 Grounding mode of transformer neutral point	雷电冲击全波(1.2/50μs)耐受电压/kV(峰值) Lightning impulse full wave (1.2/50μs) Withstand voltage/kV (peak value)	1min工频耐受电压/kV (干试与湿试)(有效值) 1 min power frequency withstand voltage/kV (Dry test and wet test)(effective value)
40.5		185	80/85[a]
72.5		325	140
126	不固定接地Unfixed grounding	250	95
252	固定接地Fixed grounding	185	85
	不固定接地Unfixed grounding	400	200
363	固定接地Fixed grounding	185	85
	不固定接地Unfixed grounding	550	230
550	固定接地Fixed grounding	185	85
	经小电抗接地 Grounding through small reactance	325	140

a 斜线下方的数值为干试耐受电压，斜线上方的数值为湿试耐受电压。

a Values after slash line are dry test withstand voltage, and values before slash line are wet test withstand voltage

(3)接地开关操作(暂时接近)时最不利的绝缘位置的试验电压(据GB1985-2014)

对于隔离断口与底座平行且与接地开关组合成一体的隔离开关，应在接地刀的最不利位置，用表中给出的工频试验电压进行试验。

在两端均停电后才能操作的隔离开关，这些试验不需进行。

(3) Test voltage of most unfavorable insulation locations during earthing switch operation (temporal close) (according to GB1985-2004)

If the isolation clearance is parallel to the base and combined to the earthing switch, then disconnect switch should be in the most unfavorable position of the earthing switch. Test with the power frequency voltage value given in the table

These tests are not required by disconnect switches which can only be operated when both terminals are power off.

1min工频耐受电压1 min power frequency withstand voltage

额定电压U_r/kV Rated voltage U_r/kV	试验电压/kV Test voltage/kV	
	中性点固定接地 Fixed grounding of neutral points	中性点不接地 Neutral points ungrounded
72.5	84	94
126	145	164
252	291	——
363	419	——
550	635	——
800	924	——

注1：解释性的注见GB1985-2004附录D。

注2：额定电压较低的隔离开关，这些试验不作要求。

Note 1 Explanatory footnotes please see GB1985-2004 annex D

Note 2 These tests are not required by disconnect switches with relatively low rated voltage

2.额定端子静态机械负荷（据GB1985-2014）

2. Rated terminal static mechanical load (according to GB1985-2014)

推荐的额定端子静态机械负荷

Recommended rated terminal static mechanical load

额定电压U_r/kV Rated voltage U_r kV	额定电流/A Rated current/A	双柱式或三柱式隔离开关 Dual-column or three-column isolation switch		单柱式隔离开关 Single-column isolation switch		垂直力 F_v*/N Vertical force F_v*/N
		水平纵向负荷 F_{x1}和F_{x2}/N Horizontal longitudinal load F_{x1} and F_{x2}/N	水平横向负荷 F_{y1}和F_{y2}/N Horizontal lateral load F_{y1} and F_{y2}/N	水平纵向负荷 F_{x1}和F_{x2}/N Horizontal longitudinal load F_{x1} and F_{x2}/N	水平横向负荷 F_{y1}和F_{y2}/N Horizontal lateral load F_{y1} and F_{y2}/N	
12		500	250			300
40.5	≤1250	750	400	800	400	500
72.5	>1600	750	500	800	500	750
126	≤2500	1000	750	1000	750	1000
	>3150	1250	750	1250	750	1000
252	<1600	1500	1000	2000	1500	1000
	≥2000	1500	1000	2000	1500	1250
363	≤2500	1500	1000	2000	1500	1250
	>3150	1500	1000	2000	1500	1500
550	≤3150	2000	1500	3000	2000	1500
	4000	2000	1500	4000	2000	1500
800	≤3150	2000	1500	3000	2000	1500
	4000	2000	1500	4000	2000	1500

a F_v 是模拟由连接导线的重量引起的力下的力。软导线的重量已计入纵向或横向力中。

a F_v is simulated to be the downward force caused by the weight of the connecting wire. The weight of soft wire has been included in the vertical or lateral force

3.单柱式隔离开关的额定接触区（据GB1985-2014）

3. Rated contact zone of single-column isolating switch (according to GB1985-2014)

表1 静触头由软导线支承时推荐的接触区

Table 1 Recommended contact zones for fixed contacts supported by soft wires

额定电压U_r/kV Rated voltage U_r/kV	x/mm	y/mm	z_1/mm	z_2/mm
72.5	100	300	200	300
126	100	350	200	300
252	200	500	250	450
363	200	500	300	450
550	200	600	400	500

x=支承导线纵向位移的总幅度（温度的影响）；
y=水平总偏移（与支承导线垂直方向的偏移）（风的影响）；
z=垂直偏移（温度和冰的影响）。
x= total range of longitudinal displacement for supporting wires (temperature influence);
y= total lateral displacement (displacement vertical to the supporting wire)(wind influence);
z= vertical displacement (temperature and ice influence)

注：静触头由软导线固定时，z_1值适用于短跨档，z_2值适用于长跨档。
Note: When fixed contacts are supported by soft wires, then z_1 applies to small span while z_2 applies to large span.

表2 静触头由硬导线支承时推荐的接触区

Table 2 Recommended contact zones for fixed contacts supported by hard wires

额定电压U_r/kV Rated voltage U_r/kV	x/mm	y/mm	z/mm
72.5,126	100	100	100
252,363	150	150	150
550	175	175	175
800	200	200	200

x=支承导线纵向位移的总幅度（温度的影响）；
y=水平总偏移（与支承导线垂直方向的偏移）（风的影响）；
z=垂直偏移（冰的影响）。
x= total range of longitudinal displacement for supporting wires (temperature influence);
y= total lateral displacement (displacement vertical to the supporting wire)(wind influence);
z= vertical displacement (ice influence).

4.隔离开关开合母线转换电流的额定值（据GB1985-2014）

4. Rated value for the switching current of disconnect switch when bus bar is open or closed (according to GB1985-2014)

(1) 额定母线转换电流

对于空气绝缘和气体绝缘的隔离开关，其额定母线转换电流值约应是80%的额定电流。不论隔离开关的额定电流多大，额定母线转换电流通常不超过1600A。

注：选择最大额定母线转换电流1600A作为能够被开合的典型的最大电流，即使隔离开关的额定电流可能很大。选择隔离开关通常是依据短时电流额定值和额定电流值。因此，隔离开关承载的最大的持续电流，可能大大的小于其额定电流。大于80%额定电流或大于1600A的额定母线转换电流可由制造厂规定。

(1) Rated bus bar switching current

As for air-insulated and gas-insulated disconnect switch, its rated bus bar switching current should be 80% of rated current. Despite the rated current of disconnect switch, rated bus bar switching current is generally not more than 1600A.

Note: Select the 1600A rated bus bar switching current as the typical maximum current that can be opened or closed even if the rated current of isolating switch may be significant.

Selecting of disconnect switch is usually based on the short-time current rating and the rated current value. Therefore, the maximum current continuous current carried by disconnect switch may be significantly less than its rated current. Current greater than 80% of rated current or rated bus bar switching current greater than 1600A can be regulated by the manufacturer.

(2) 额定母线转换电压

额定母线转换电压在表中给出。其他的额定母线转换电压可由制造厂规定。

(2) Rated bus bar switching voltage

Rated bus bar switching voltages are given in the table. Other bus bar switching voltages can be regulated by the manufacturer.

隔离开关的额定母线转换电压

Rated bus bar switching voltage of isolating switch

额定电压/kV Rated induction current (effective value)	空气绝缘的隔离开关/V(有效值) Air-insulated disconnect switch (effective value)	气体绝缘的隔离开关/V(有效值) Gas-insulated disconnect switch (effective value)
72.5/126	100	10,30[a]
252/363	300	20,100[a]
550/800	400	40,100[a]

a 适用于长母线的场合。
a. For long bus bar use.

5.接地开关开合感应电流的额定值
（据GB1985-2014,DL/T486-2014）

5. Rated value for the switching current of earthing switch when it is open or closed
(according to GB1985-2014, DL/T486-2014)

接地开关的额定感应电流和额定感应电压的标准值
Standard values for rated induction current and rated induction voltage of the earthing switch

额定电压 U_r/kV Rated voltage U_r/kV	电磁耦合Electromagnetic coupling				静电耦合Electrostatic coupling			
	额定感应电流/A (有效值) Rated induction current (effective value)		额定感应电压/kV (有效值) Rated induction voltage (effective value)		额定感应电流/A (有效值) Rated induction current (effective value)		额定感应电压/kV (有效值) Rated induction voltage (effective value)	
	类别Type		类别Type		类别Type		类别Type	
	A	B	A	B	A	B	A	B
(40.5) 72.5	50	80(100)	0.5	2(4)	0.4	2	3	6
126	50	80(100)	0.5	2(6)	0.4	2(5)	3	6
252	80	80(160)	1.4	2(15)	1.25	3(10)	5	12(15)
363	80	160(200)	2	10(22)	1.25	18	5	17(22)
550	80	160(200)	2	20(25)	2(1.6)	25(25.50)	8	25(25.50)
800	80	160(200)	2	20(25)	3	25(25.50)	12	32

注1：A类接地开关：用于耦合弱或比较短的平行线路。B类接地开关：用于耦合强或比较长的平行线路。

注2：在某些情况(接地的线路很长一段与带电线路邻近，带电线路上有很大负荷，带电线路的运行电压比接地线路的高……)下，其感应电流和感应电压可能高于表中的值。对于这类情况，额定值应由制造厂和用户协商确定。

注3：表中括号内的数值为电力行业标准DL/T486-2010的规定值。

Note 1: Class A earthing switch: It is used for weak coupling or relatively short parallel lines. Class B earthing switch: It is used for strong coupling or relatively long parallel lines.

Note 2: In some cases (a long section of grounding lines is near to live lines which are under great load, and the running voltage of live lines are greater than that of the grounding line ...), values of induction current and induction voltage may be higher than those given in the table. For such cases, values can be determined in consultation by the manufacturer and user.

Note 3: The values in parentheses in this table are specified values by the power industry standard DL/T486-2010.

Note:

ISO

Kawara Trade S.A.

bsi.

By Royal Charter

Certificate of Registration

环境管理体系 - ISO 14001:2015

兹证明：

江苏省如高高压电器有限公司
91320682138617863H
中国
江苏省
如皋市
如皋经济开发区
惠民西路1号
邮编：226572

Jiangsu Rugao High-voltage
Electric Apparatus Co.,Ltd.
No.1, West Huimin Road
Rugao
Jiangsu
226572
China

持有证书：**EMS 660808**

并运行符合 ISO 14001:2015 要求的环境管理体系，认证范围如下：

800kV及以下高压隔离开关、252kV及以下高压断路器、熔断器及负荷开关、126kV及以下高压交流气体绝缘金属封闭开关设备的设计与制造。
The design and manufacture of high-voltage disconnectors (below 800kV), high-voltage circuit breakers (below 252kV),fuses, load switches, high-voltage alternating-current gas-insulated metal-enclosed switchgear(GIS) (below 126kV).

BSI代表：

Chris Cheung，亚太地区 合规风险主管

首次发证日期： 2016-10-10
最新发证日期： 2019-09-25

生效日期： 2019-10-10
有效期至： 2022-10-09

...making excellence a habit.™

此证书以电子版本方式发放，所有权属BSI并受合同条款的约束
可以 在线 查询电子证书的有效性
纸质的证书可以通过网站 http://www.bsi-global.com/ClientDirectory 或者致电 +86 10 8507 3000 查询
关于证书范围及 ISO 14001:2015 要求的适用性的进一步说明请咨询BSI

Kowara Trade S.A

bsi.

By Royal Charter

Certificate of Registration

质量管理体系 - ISO 9001:2015

兹证明：

江苏省如高高压电器有限公司
91320682138617863H
中国
江苏省
如皋市
如皋经济开发区
惠民西路1号
邮编：226572

Jiangsu Rugao High-voltage
Electric Apparatus Co.,Ltd.
No.1, West Huimin Road
Rugao
Jiangsu
226572
China

持有证书： **FM 660809**

并运行符合 ISO 9001:2015 要求的质量管理体系，认证范围如下：

800kV及以下高压隔离开关、252kV及以下高压断路器、熔断器及负荷开关、126kV及以下高压交流气体绝缘金属封闭开关设备的设计与制造。
The design and manufacture of high-voltage disconnectors (below 800kV), high-voltage circuit breakers (below 252kV),fuses, load switches, high-voltage alternating-current gas-insulated metal-enclosed switchgear(GIS) (below 126kV).

BSI代表：

Chris Cheung，亚太地区 合规风险主管

首次发证日期： 2016-10-10
最新发证日期： 2019-09-25

生效日期： 2019-10-10
有效期至： 2022-10-09

...making excellence a habit.™

此证书以电子版本方式发放，所有权属BSI并受合同条款的约束。
可以 在线 查询电子证书的有效性。
打印证书可以通过网站 http://www.bsi-global.com/ClientDirectory或者致电 +86 10 8507 3000 查询。本证书信息参照在国家认证认可监督管理委员会官方网站 (www.cnca.gov.cn) 上查询。
*上证书范围要求 ISO 9001:2015 要求的适用性的进一步说明请咨询BSI。
获证组织需确定世纪受监督审核并经审核合格此证书方继续有效。
此证书只在提供完整证书时才有效。

bsi.

By Royal Charter

Certificate of Registration

职业健康安全管理体系 - ISO 45001:2018

兹证明：

江苏省如高高压电器有限公司
91320682138617863H
中国
江苏省
如皋市
如皋经济开发区
惠民西路1号
邮编：226572

Jiangsu Rugao High-voltage
Electric Apparatus Co.,Ltd.
No.1, West Huimin Road
Rugao
Jiangsu
226572
China

持有证书： **OHS 660811**

并运行符合 ISO 45001:2018 要求的职业健康安全管理体系，认证范围如下：

800kV及以下高压隔离开关、252kV及以下高压断路器、熔断器及负荷开关、126kV及以下高压交流气体绝缘金属封闭开关设备的设计与制造。
The design and manufacture of high-voltage disconnectors (below 800kV), high-voltage circuit breakers (below 252kV),fuses, load switches, high-voltage alternating-current gas-insulated metal-enclosed switchgear(GIS) (below 126kV).

BSI代表：

Chris Cheung，亚太地区 合规风险主管

首次发证日期： 2016-10-10
最新发证日期： 2019-09-25

生效日期： 2019-10-10
有效期至： 2022-10-09

bsi. ANAB ACCREDITED ISO/IEC 17021 MANAGEMENT SYSTEMS CERTIFICATION BODY

...making excellence a habit.™

此证书以电子版本方式发放，所有权归BSI并受合同条款的约束。
可以 在线 查询电子证书的有效性
打印的证书可以通过网站 http://www.bsi-global.com/ClientDirectory或者致电 +86 10 8507 3000 查询。
本证书信息亦可在国家认证认可监督管理委员会官方网站 (www.cnca.gov.cn) 上查询。
关于该证书范围及 ISO 45001:2018 要求的适用性的进一步说明请咨询BSI。
此证书须定期接受监督审核并经审核合格此证书方继续有效。
此证书只在提供完整证书时才有效。

TEST REPORT

Kawara Trade S.A.

Test Report No.:
(M)A2013—141

2013003396A

TESTING
CNAS L2550

机检电（2015）46号

TEST REPORT

Specimen: GW4C—252D(G.W)/J2000—50

Outdoor High-voltage Alternating Current Disconnector

Client: Jiangsu Rugao High-voltage Electrical Apparatus Co., Ltd.

Manufacturer: Jiangsu Rugao High-voltage Electrical Apparatus Co., Ltd.

Test Type: Type Test

Shanghai Electric Power Transmission & Distribution
Testing Centre Co., Ltd.
Machinery Industry High-voltage Transmission & Distribution
Equipment Quality Inspection&Testing Center

Attention

1. The report is no valid if not stamped by ***"Inspection Report Special Seal"***;
2. The copied versions of the report is no valid without stamped on coversheet by ***"Inspection Report Special Seal"***;
3. The report is no valid without accredited approver's signature;
4. The report is no valid with handwriting modification;
5. If there is any disagreement about this report, advice should be sent to the testing centre in one month since receiving the report; otherwise, it will not be accepted;
6. The report is only responsible for the tested sample.

Note:

SETC – the abbreviation for "Shanghai Electric Power Transmission & Distribution Testing Centre Co., Ltd"

MIQC – the abbreviation for "Machinery Industry High-voltage Transmission and Distribution Equipment Quality Inspection & Testing Center"

Address: No.696 Lingshi Road,
Shanghai, P.R. China
Post code: 200072

Tel: +86-21-56037283
Fax: +86-21-56037283
Website: www.setc-sh.com

d

SETC MIQC	Table of Contents	Test Report No.: (M)A2013—141 Page 1

Content	Page	Content	Page
Cover	/		
Table of contents	1		
Specimen and manufacturer	2		
Test items and conclusion	3		
Technical parameters of the components	4		
Measurement of the resistance of the main circuit	5		
Temperature-rise tests	6~7		
Mechanical tests	8~13		
Measurements of the resistance of the auxiliary contacts	14		
Picture of specimen	15		
Drawings	16		
BLANK BELOW			

SETC MIQC	Test Report	Test Report No.: (M)A2013—141 Page 2

Test type	Type test
Specimen	GW4C—252D(G·W)/J2000—50 Outdoor High-voltage Alternating Current Disconnector
Manufacturer	Jiangsu Rugao High-voltage Electrical Apparatus Co., Ltd.
Address of Manufacturer	No.1 West Huimin Rd, RuGao City, Jiangsu Province, China
Client	Jiangsu Rugao High-voltage Electrical Apparatus Co., Ltd.

Manufacturing date	July 2013	Serial number	K136486

Ratings of specimen	Rated voltage (kV)	252		
	Rated current (A)	2000		
	Rated frequency (Hz)	50		
	Rated short-time withstand current(3s) (kA)	50		
	Rated peak withstand current (kA)	125		
	Rated short-duration power-frequency withstand voltage (kV)	460/ 460(+145)		
	Rated lightning impulse withstand voltage (peak) (kV)	1050/ 1050(+200)		
	Mechanical endurance (times)	10000		

Specification and documents of specimen	0SR.520.004 Technical specifications
	0SR.192.003 Testing and Appraising Outline
	2SR.065.090 General Assembly Drawings
Explanation	

Representative of client:: Xu Hailiang

Testing date: July 15, 2013~July 29, 2013

SETC MIQC 3003395A	Test Items and Conclusion	Test Report No.: (M)A2013—141
		Page 3

Specimen	GW4C—252D(G·W)/J2000—50 Outdoor High-voltage Alternating Current Disconnector
Manufacturer	Jiangsu Rugao High-voltage Electrical Apparatus Co., Ltd.
Client	Jiangsu Rugao High-voltage Electrical Apparatus Co., Ltd.

Test Items

1. Measurement of the resistance of the main circuit: ≤180μΩ
2. Temperature-rise tests: 2000A×1.1=2200A
3. Mechanical tests

3.1 Mechanical characteristic tests

3.2 Mechanical operation tests: disconnector; earthing switch; interlocking device

3.3 Mechanical endurance tests: 10000 times

3.4 Static mechanical terminal load tests: horizontal longitudinal load 1500N, transversal load 1000N; vertical load 1250N

4. Measurement of the resisitance of the auxiliary contacts: ≤50Ω

Applied standard	GB 1985—2004 High-voltage alternating-current disconnectors and earthing switches (IEC 62271-102:2002 High-voltage switchgear and controlgear Part 102: High-voltage alternating current disconnectors and earthing switches MOD)

Conclusion: The above mentioned specimen has passed the items 1~4 performed in accordance with the applied standard.

Prepared by: Di Jun	Reviewed by: Jiang Yumin	Approved by: Luo Shicong
Date: 2014-08-14	Date: 2014-08-14	Date: 2014-08-14

SETC MIQC	Technical Parameters of the Components			Test Report No.: (M)A2013—141 Page 4
Name	Type	Specification	Manufacturer	Manufacturing date and serial number
Electrically operating device	SRCJ2	operating voltage AC380V Control voltage AC220V	Jiangsu Rugao High Voltage Electric Apparatus Co., Ltd.	May, 2013
Insulator	5SR.720.020	252kV, Height 2400mm Bending strength 6kN,Torsional strength 3kN·m	Xian Shanyuan High Voltage Porcelain Insulator Co.,Ltd.	January, 2013
earthing switch	JW10—252(G.W)/S50	252kV, 50kA	Jiangsu Rugao High Voltage Electric Apparatus Co., Ltd.	July, 2013 K136486
/	/	/	/	/
/	/	/	/	/
/	/	/	/	/

SETC MIQC	Measurement of the Resistance of Main Circuits	Test Report No.: (M)A2013—141 Page 5

1 Test method: DC votage-drop method, Test current: 100A

2 Test results:

Measurement of the resistance of main circuits tests (μΩ)

Test position	Before temperature-rise test			After temperature-rise test			Required value	Technical requirement
	A	B	C	A	B	C		
Total	/	135	/	/	137	/	≤180	The resistance shall not differ more than 20% after temperature-rise tests.

Conclusion	Passed	Recorded by	Xu Yiqi	Date	July 15, 2013
		Checked by	Liu Jian	Tested by	Xu Yiqi Feng Xiuge

SETC MIQC	Temperature-rise Tests	Test Report No.: (M)A2013—141 Page 6

Test current	2000A×1.1	Frequency: 50 Hz	
Number of phases	Single phase	Wind speed: ≤ 0.5 m/s	
Bus link	Section of Cu Busbar: 80mm×8mm×2, 2m length both on power supply side and the other side.		

No.	The measured temperature-rise data (K) ambient temperature 30.0℃			Temperature-rise allowed (K)	Note
	A	B	C		
1	/	40.6	/	Difference compared to point No.2 ≤±5K	
2	/	43.3	/	65	
3	/	33.0	/	65	
4	/	37.2	/	65	
5	/	41.6	/	65	
6	/	43.7	/	65	
7	/	43.1	/	65	
8	/	38.5	/	65	
9	/	44.3	/	65	
10	/	41.4	/	65	
11	/	43.9	/	65	
12	/	34.1	/	65	
13	/	34.2	/	65	
14	/	38.9	/	65	
15	/	40.8	/		
16	/	41.7	/	Difference compared to point No.15 ≤±5K	

Explanation: Test was performed on a single pole.

Conclusion	Passed	Recorded by	Xu Yiqi	Date	July 15, 2013
		Checked by	Liu Jian	Tested by	Xu Yiqi Feng Xiuge

SETC MIQC	Thermocouple positions of Temperature-rise Tests	Test Report No.: (M)A2013—141
		Page 7

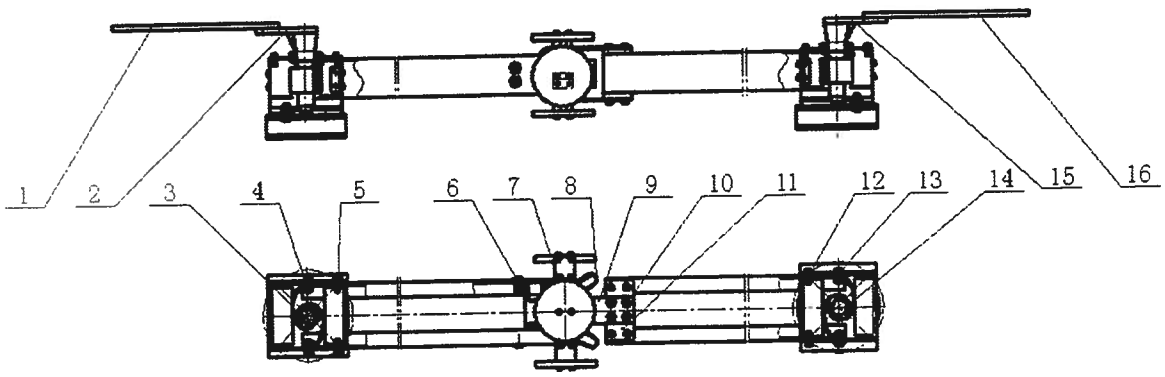

SETC MIQC	Mechanical Characteristics Tests on Disconnector	Test Report No.: (M)A2013—141
		Page 8

Type of specimen	GW4C—252D(G·W)/J2000—50	Serial No.: K136486

Test items:

No.	Test items	Unit	Test requirement	Before endurance test			After endurance test		
				A	B	C	A	B	C
1	Clearance between open contacts	mm	≥2200	2433	2430	2431	2432	2432	2431
2	Clearance to the earth	mm	≥2100	2150	2150	2150	2150	2150	2150
3	Center-to-center distance between poles	mm	4000±5	AB4000		BC4000	AB4000		BC4000
4	Closing time	s	6~8	6.8			6.9		
5	Opening time	s	6~8	7.1			7.3		
6	Closing simultaneity	mm	≤20	3.1			3.0		
7	Opening simultaneity	mm	≤20	3.2			3.4		
8	Manually closing moment	N •m	≤250	77			76		
9	Manually opening moment	N •m	≤250	79			80		
10	Nameplates and earthing mark	/	/	OK			OK		
11	Manual C-O operation 5 times	/	/	OK			OK		
12	General construction and appearance	/	/	OK			OK		
13	5 C-O operations under rated operating voltage	/	/	OK			OK		
14	5 C-O operations under maximum operating voltage	/	/	OK			OK		
15	5 C-O operations under minimum operating voltage	/	/	OK			OK		

Conclusion	Passed	Recorded by	Huang Hui	Date	July 19, 2013 & July 29,2013
		Checked by	Liu Jian	Tested by	Huang Hui Gu Jiahui

SETC MIQC	Mechanical Endurance Tests on Disconnector	Test Report No.: (M)A2013—141
		Page 9

Type of specimen	GW4C—252D(G·W)/J2000—50	Operating device	Electrically operating device
Number of poles	Three	Serial No.	K136486

1 Test conditions:

1	Installation	Installed on own stand
2	Number of poles operated by the operating device	Three
3	Whether the disconnector was operated by an operating device.	Yes
4	Whether the specimen was adjusted or fastened during each test cycle.	No
5	Operating frequency	Twice / min.
6	Total number of mechanical endurance tests	10000

2 Mechanical endurance tests:

50% of rated horizontal longitudinal load was applied on both terminals of the three-pole disconnector during the test.

Operating sequence				No. of operating sequences	Test results
1st cycle	$C\text{-}t_d\text{-}O\text{-}t_d$			10000	OK
	Operating mode	Operating rod		/	/
		Manual device		/	/
		Electrically operating device	at rated voltage	9000	OK
			at Minimum voltage	500	OK
			at Maximum voltage	500	OK
2nd cycle	$C—t_d—O—t_d$			/	/
	Operating mode	Operating rod		/	/
		Manual device		/	/
		Electrically operating device	Rated voltage	/	/
			Minimum voltage	/	/
			Maximum voltage	/	/

SETC MIQC	Mechanical Endurance Tests on Disconnector	Test Report No.: (M)A2013—141
		Page 10

3.Test conditions:

1	Whether any part had adverse effects on the operation.	No
2	Whether insulators were damaged, whether the felted parts were loose.	No
3	Whether copper was exposed in the coated contact.	No
4	Whether the position indication still meets the requirements	Yes
5	Whether the operating force was 20% higher than force before tests.	No
6	Status of mechanical travel limit device	Good
7	Mechanical characteristic and operation tests before and after mechanical endurance tests	Passed
8	Power frequency withstand voltage test on the auxiliary and control circuits: 2000V 1min .	Passed
9	The static mechanical terminal load tests test after the mechanical test.	Passed
10	Measurement of the resistance of test circuit Test requirement: the resistance shall not differ more than 20% after temperature-rise test.	Passed

Before endurance test (μΩ)			After endurance test (μΩ)			Technical requirement (μΩ)
A	B	C	A	B	C	≤180
137	135	136	138	137	138	

Conclusion	Passed	Recorded by	Huang Hui	Date	July 19, 2013 & July 29, 2013
		Checked by	Liu Jian	Tested by	Huang Hui, Gu Jiahui

SETC MIQC	Mechanical Characteristics Tests on Earthing Switch	Test Report No.: (M)A2013—141
		Page 11

Type of specimen	JW10—252(G·W)/S50	Serial No.: K136486

Test items:

No.	Test items	Unit	Test requirement	Test Results		
				A	B	C
1	Clearance between open contacts	mm	≥2100	2270	2269	2270
2	Clearance to the earth	mm	≥2100	2150	2150	
3	Center-to-center distance between poles	mm	4000±5	AB4000	BC4000	
4	Manually closing moment	N • m	≤250	67		
5	Manually opening moment	N • m	≤250	69		
6	Nameplates and earthing mark	/	/	OK		
7	Manual C-O operation 5 times	/	/	OK		
8	General construction and appearance	/	/	OK		

Conclusion	Passed	Recorded by	Huang Hui	Date	July 19, 2013
		Checked by	Liu Jian	Tested by	Huang Hui, Gu Jiahui

1. Test Requirements:

1.1 When the disconnector is closed, the earthing switch can't be closed.
1.2 Only when the disconnector is open, the earthing switch can be closed.
1.3 When the earthing switch is closed, the disconnector can't be closed.
1.4 Only when the earthing switch is open, the disconnector can be closed.

According to the above test requirements, 50 operations should be carried out to the specimen. Before the tests, the interlocking device should be put in the position that prevents the switch from operating. During the tests, the normal operating force should be applied, and no adjustment should be made to the switches or interlocking device.

2. Test condition:

2.1 When the disconnector was closed, try to close the earthing switch →it can't be closed.
2.2 When the disconnector was open, try to close the earthing switch→it can be closed.
2.3 When the earthing switch was closed, try to close the disconnector→it can't be closed.
2.4 When the earthing switch was open, try to close the disconnector→it can be closed.

The interlocking device was in the position that prevents the switch from operating. 50 operations were carried out to the specimen and it can't be operated. During the tests, the normal operating force was applied, and the switch was not adjusted.

3. Test Result:

Passed

Conclusion	Passed	Recorded by	Huang Hui	Date	July 19, 2013
		Checked by	Liu Jian	Tested by	Huang Hui Gu Jiahui

I. Test requirements: Before and after the endurance test, rated static mechanical loads should be applied on the disconnector terminals in accordance with the table below, and 20 times of closing /opening operation should be carried out with normal operating force. It is required that the disconnector can be opened/closed normally each time, the travel limit device and interlocking device works well. All parts of disconnector should be in good condition, and without excessive wear. The test should be conducted in steps. Horizontal load F_{a1}/ F_{a2} (longitudinal) should be applied first, and then horizontal load F_{b1} (transversal), and at last vertical load Fc.

No.	Item		Unit	Value	Remarks
1	Rated horizontal load	Longitudinal F_{a1}/F_{a2}	N	1500	/
		Transversal F_{b1}	N	1000	/
2	Rated vertical load Fc		N	1250	/

II. Test situation:

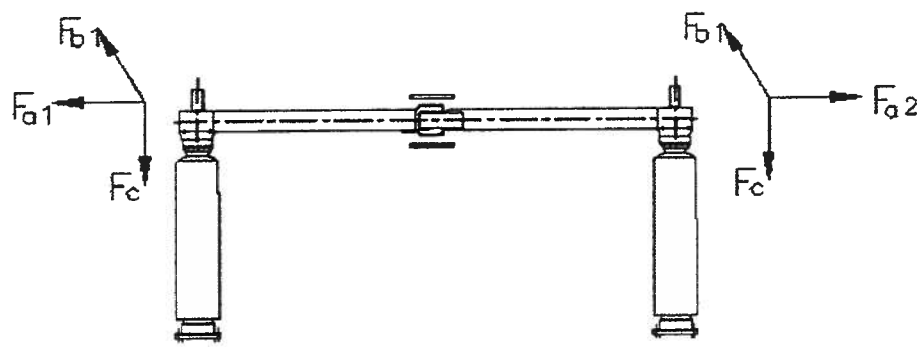

Before and after the endurance test, static load F_{a1}/ F_{a2}、F_{b1}、F_c were applied in sequence to the terminals of disconnector. 20 times of CO operations were conducted. The disconnector worked well. After test, there was no damage to the normal operation of the disconnector, and there was no abnormality in manual force during CO operations. The travel limit device and interlocking device operated normally. All parts of the disconnector were in good condition, and without excessive wear.

Conclusion	Passed	Recorded by	Huang Hui	Date	July 19, 2013 & July 29, 2013
		Checked by	Liu Jian	Tested by	Huang Hui, Gu Jiahui

SETC MIQC	Measurements of the resistance of the auxiliary contacts	Test Report No.: (M)A2013—141
		Page 14

1. Test requirements: One sample of each type of auxiliary contacts should be connected in the resistive load circuit. A direct current source with open circuit voltage 6V is applied to the circuit. When the current flowing through the circuit is 10mA, the resistance of auxiliary contacts should be measured and the resistance should not be greater than 50Ω.
2. Test situation: find out a normally open contact and a normally close contact. When the contact is closed, connect the contact to the resistive load circuit; then apply a direct current source with open circuit voltage 6V to the circuit; adjust the slide rheostat to make the current flowing through the auxiliary contact 10mA; measure the voltage across the two terminals of the contact, and then calculate the value of the resistance.

No.	Auxiliary contact	Contact No.	Voltage between contacts (mV)	Resistance between contacts after endurance test (mΩ)	The required resistance (Ω)	Test results
1	Normally open contacts	2,4	0.588	58.8	≤50	Passed
2	Normally close contacts	1,3	0.631	63.1	≤50	Passed

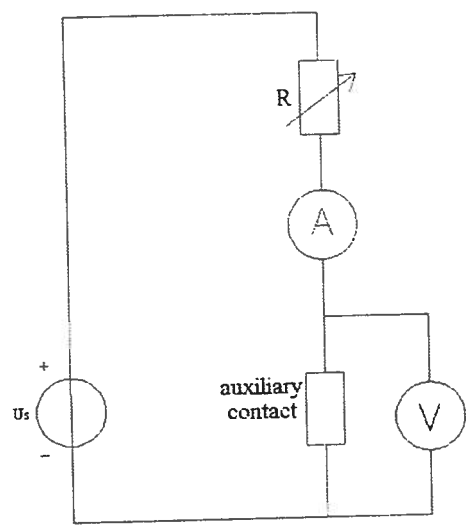

A: Ammeter V: Voltmeter

R: Sliding rheostat Us: 6V DC power supply

Diagram of the measurement of the resistance of the auxiliary contacts:

3. Test result: Passed

Conclusion	Passed	Recorded by	Huang Hui	Date	July 29, 2013
		Checked by	Liu Jian	Tested by	Huang Hui Gu Jiahui

Pictures

Specimen: GW4C—252D(G·W)/J2000—50

Outdoor High-voltage Alternating Current Disconnector

Manufacturer: Jiangsu Rugao High-voltage Electrical Apparatus Co., Ltd.

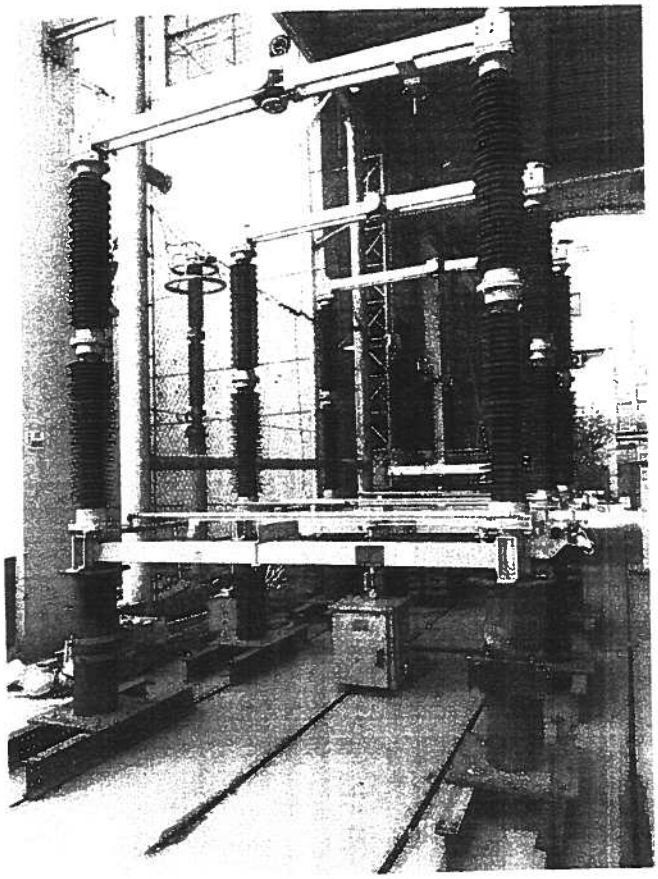

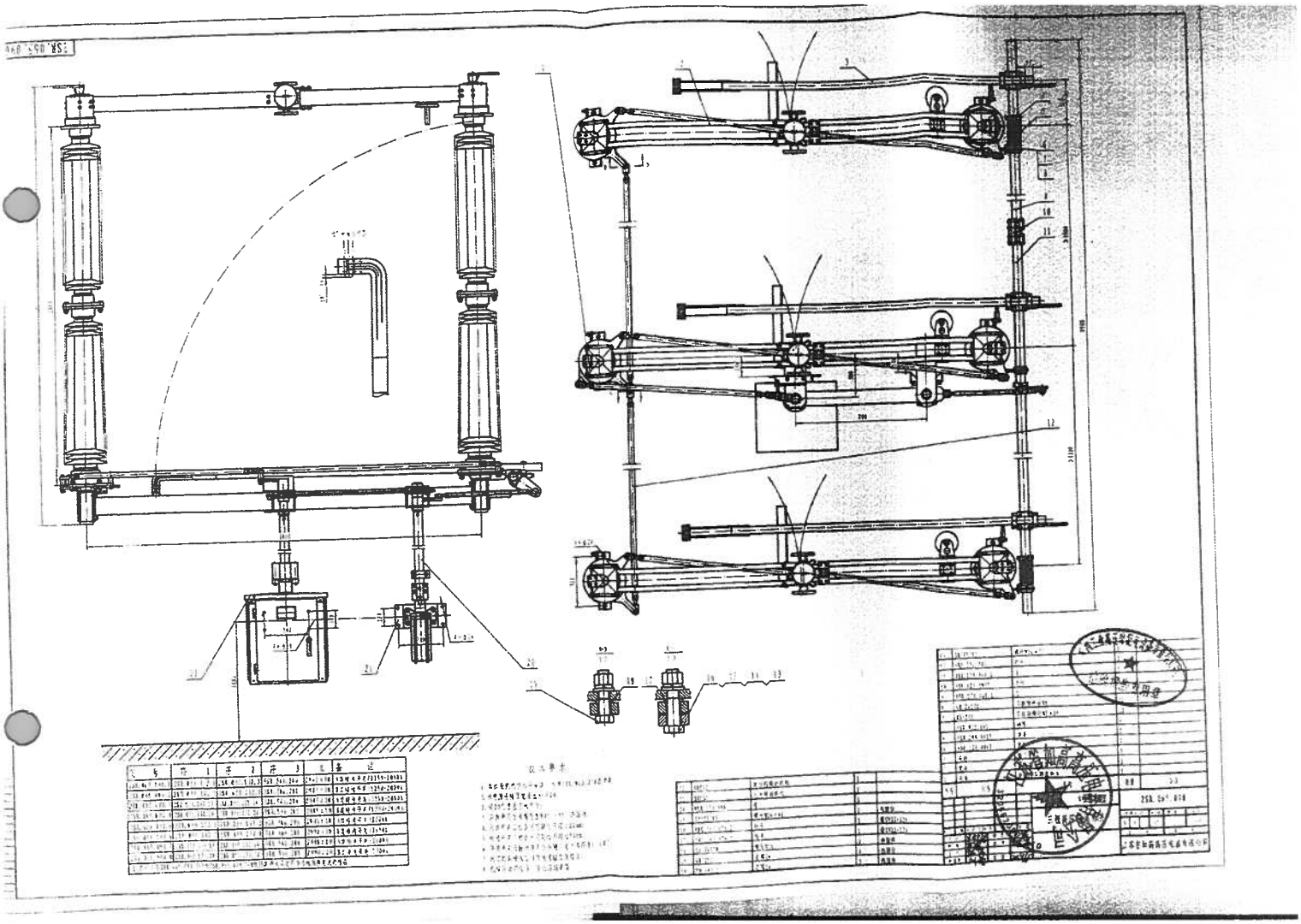

2

PLANILLA DE DATOS GARANTIZADOS

Kawara Trade S.A.

9. PLANILLA DE DATOS GARANTIZADOS

SECCIONADOR 245 kV			
1.	Nombre del fabricante, país donde se fabrica:	Jiangsu Rugao High Voltage Electric Apparatus Co.. Ltd., China	
2.	Denominación dada por el fabricante, tipo, modelo:	GW4C-252	
3.	Dibujos de dimensiones Nros.:	0SR.305.3989E、0SR.305.3991E	
4.	Diagrama de cableados de protección y control Nros.:	0SR.352.271.1	
5.	Características técnicas:		
5.1	Número de polos:	3	
5.2	Frecuencia:	50	Hz
5.3	Tensión nominal (U_r):	245	*kV*
5.4	Tensión Nominal Soportable de Impulso Atmosférico:	950	*kV*
5.5	Tensión Nominal Soportable a Frecuencia Industrial	460	kV
5.6	Corriente Nominal en Servicio Continuo (I_r):	2000	*A*
5.7	Corriente Nominal de Corta Duración (I_k) (*Rated short time withstand Current*):	40	*kA*
5.8	Corriente Máxima de Cortocircuito (I_p) (*Rated peak withstand current*):	100	*kA*
5.9	Mecanismo de operación		
	a. Tipo operación:	barra torsional operada en forma motorizada y/o manual	
	b. Tipo de Motor:	tipo universal	
	c. Tensión de alimentación:	±110	*V*
5.10	Tipo de montaje	Instalación horizontal	
5.11	Tipo de apertura:	Apertura Central	
5.12	Distancias:		
	a) Mínima entre polos:	4000	*mm.*
	b) Máxima entre polos:	4500	*mm.*
	c) Altura del dispositivo de accionamiento del mecanismo de operación:	1000	*mm.*

5.13	Pesos:		
	a. Peso aproximado del seccionador completo:	1230	kg
	b. Peso por polo:	~307	kg
	c. Peso del mecanismo de operación:	75	kg
5.14	Volumen aproximado (embalado):	~8.5	m^3
5.15	Peso aproximado (embalado):	~2450	kg

6. Descripción del material de las superficies de contacto de los seccionadores, incluyendo las cuchilla de puesta a tierra:: Cu

7. Conectores de potencia ofertados: Si

8. Número del Certificado de aprobación correspondiente al prototipo del equipo ofertado o de características similares: ver documentos en GW4C-252 de 3. INFORME PRUEBA TIPO

9. Normas aplicadas y año de publicación: IEC 62271-102

10. Lista de folletos, planos y catálogos necesarios para describir con claridad el equipo ofertado (deben acompañarse): ver Catalogue–CB+DS en 5. CATALOGO

11. Diferencias con la Especificación: NO

12. Observaciones: NO

Se deberá presentar una PDG por cada tipo de seccionador ofertado.

PLANOS

Kawara Trade S.A.

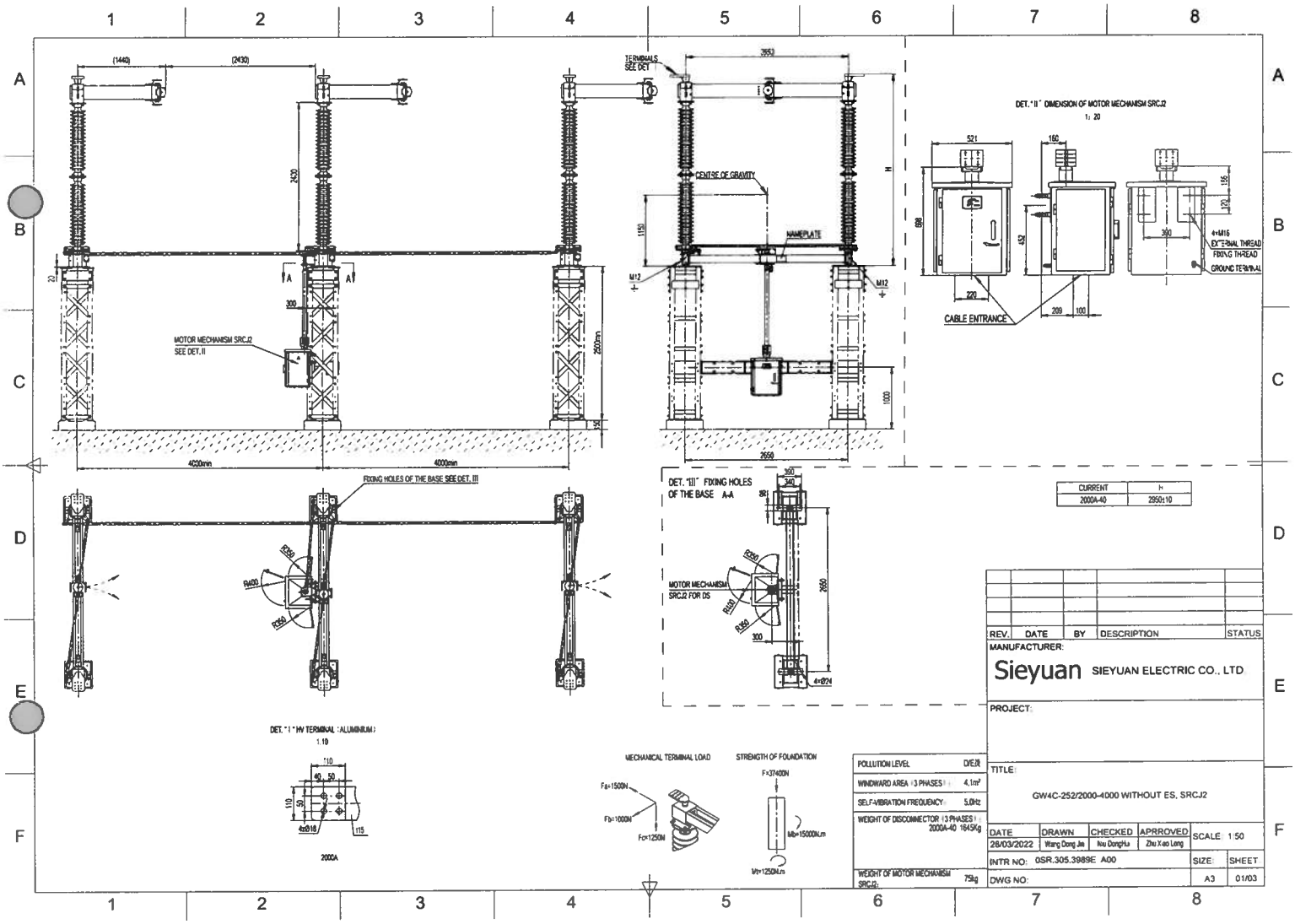
TERMINALS SEE DET
CENTRE OF GRAVITY
NAMEPLATE
MOTOR MECHANISM SRCJ2 SEE DET. II
FIXING HOLES OF THE BASE SEE DET. III
4000mm
4000mm
2650
DET. "II" DIMENSION OF MOTOR MECHANISM SRCJ2
1: 20
CABLE ENTRANCE
4×M16 EXTERNAL THREAD FIXING THREAD
GROUND TERMINAL
DET. "III" FIXING HOLES OF THE BASE A-A
MOTOR MECHANISM SRCJ2 FOR DS
4×Ø24
DET. "I" HV TERMINAL (ALUMINIUM)
1: 10
4×Ø18
2000A
MECHANICAL TERMINAL LOAD
Fa=1500N
Fb=1000N
Fc=1250N
STRENGTH OF FOUNDATION
Fx=3740ON
Mb=15000N.m
Mx=1250N.m
POLLUTION LEVEL DE/R
WINDWARD AREA (3 PHASES) 4.1m²
SELF-VIBRATION FREQUENCY 5.0Hz
WEIGHT OF DISCONNECTOR (3 PHASES) 2000A-40 1645Kg
WEIGHT OF MOTOR MECHANISM SRCJ2: 75kg
CURRENT | H
2000A-40 | 2950±10
REV. DATE BY DESCRIPTION STATUS
MANUFACTURER:
Sieyuan SIEYUAN ELECTRIC CO., LTD
PROJECT:
TITLE:
GW4C-252/2000-4000 WITHOUT ES, SRCJ2
DATE 28/03/2022
DRAWN Wang Dong Jie
CHECKED Niu DongHui
APRROVED Zhu Xiao Long
SCALE 1:50
INTR NO: OSR.305.3989E A00
SIZE A3
SHEET 01/03
DWG NO:

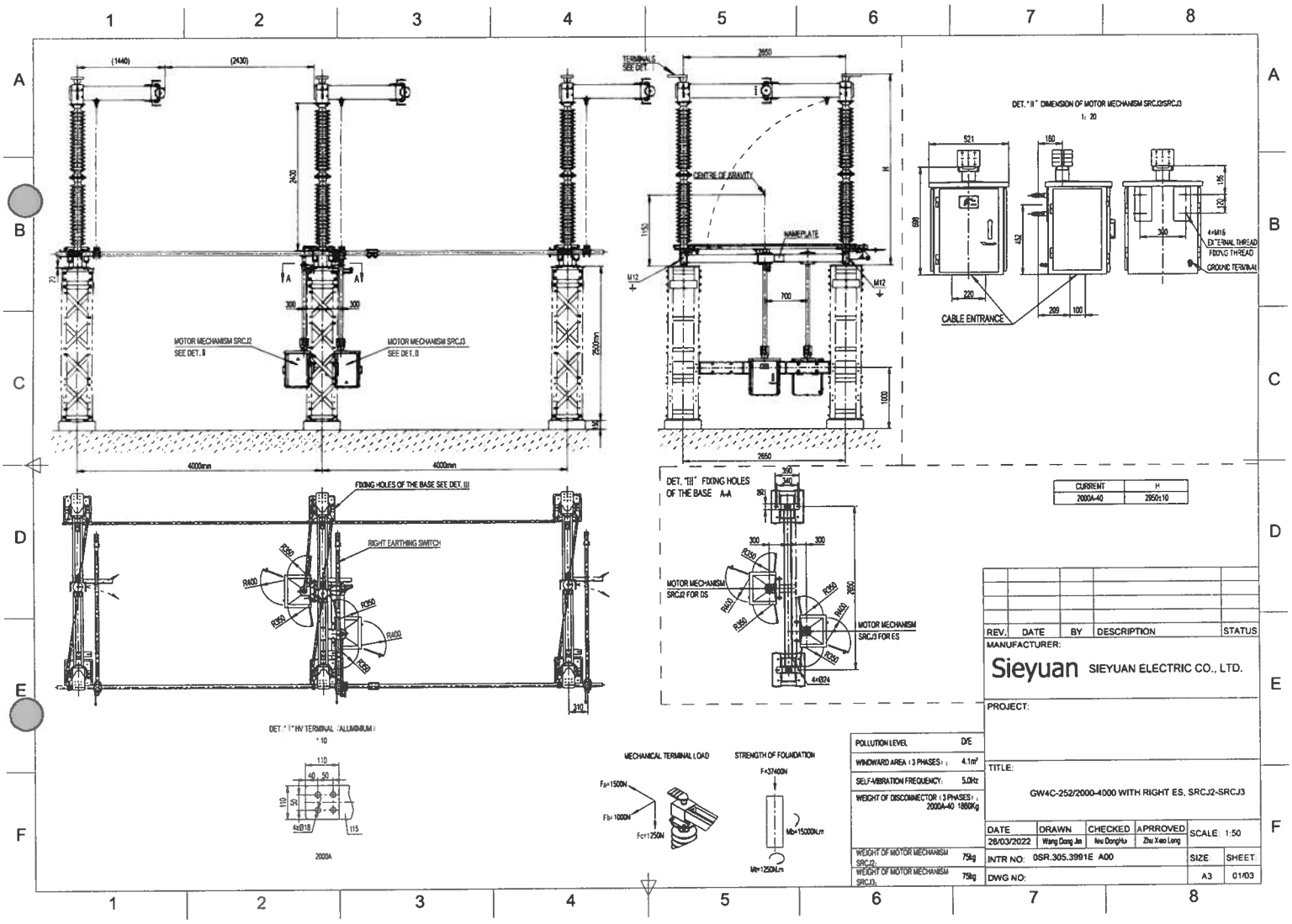

CURRENT	H
2000A-40	2950±10

POLLUTION LEVEL	D/E
WINDWARD AREA (3 PHASES)	4.1m²
SELF-VIBRATION FREQUENCY:	5.0Hz
WEIGHT OF DISCONNECTOR (3 PHASES), 2000A-40	1800Kg
WEIGHT OF MOTOR MECHANISM SRCJ2:	75kg
WEIGHT OF MOTOR MECHANISM SRCJ3:	75kg

REV.	DATE	BY	DESCRIPTION	STATUS

MANUFACTURER:

Sieyuan SIEYUAN ELECTRIC CO., LTD.

PROJECT:

TITLE:

GW4C-252/2000-4000 WITH RIGHT ES, SRCJ2-SRCJ3

DATE	DRAWN	CHECKED	APRROVED	SCALE 1:50
28/03/2022	Wang Dong Jie	Niu Dong Hu	Zhu Xiao Long	

INTR NO: 0SR.305.3991E A00	SIZE	SHEET
DWG NO:	A3	01/03

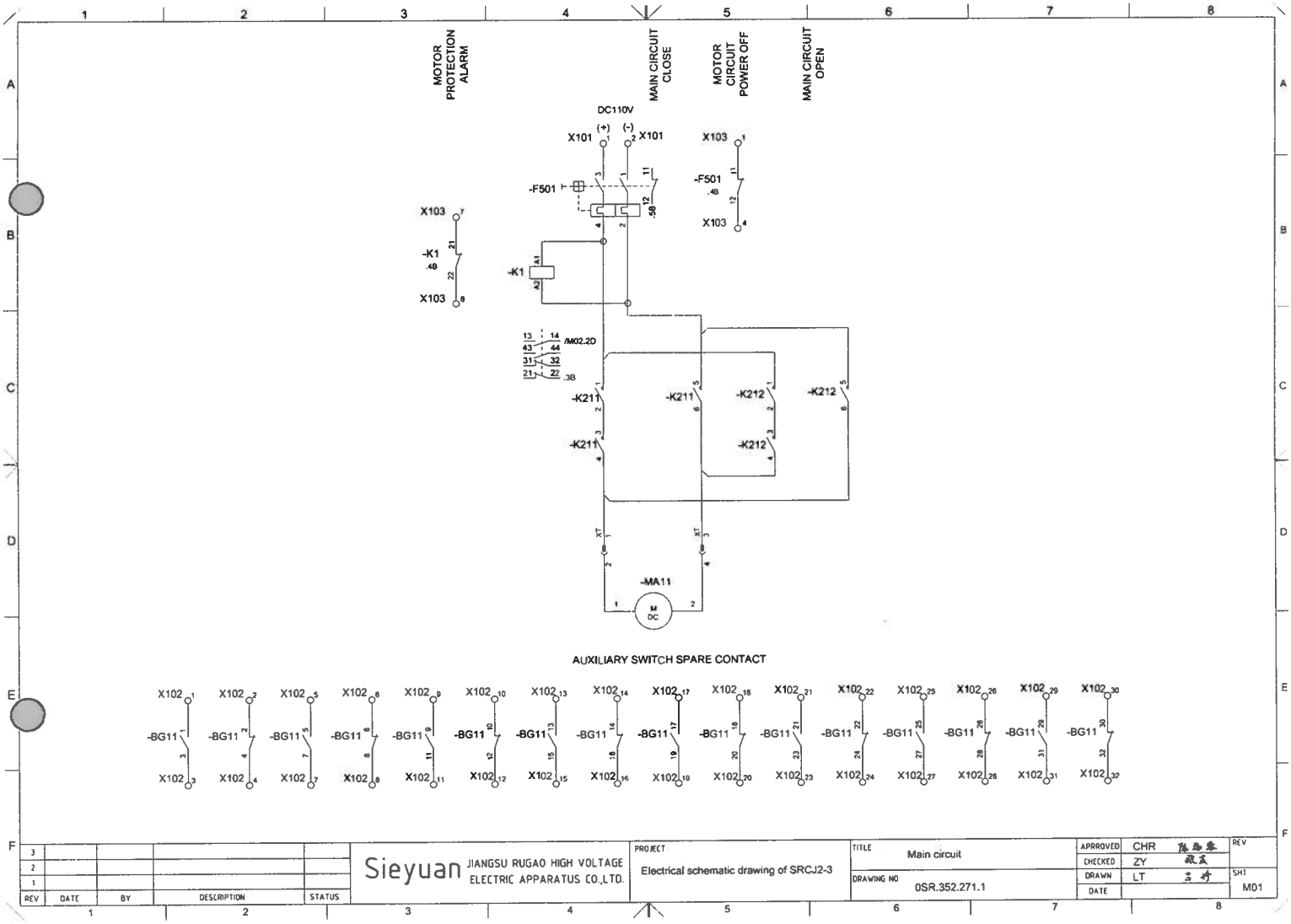

REV	DATE	BY	DESCRIPTION	STATUS
3				
2				
1				

Sieyuan JIANGSU RUGAO HIGH VOLTAGE ELECTRIC APPARATUS CO.,LTD.

PROJECT: Electrical schematic drawing of SRCJ2-3

TITLE: Main circuit

DRAWING NO: 0SR.352.271.1

APPROVED	CHR	
CHECKED	ZY	
DRAWN	LT	
DATE		

REV

SHT M01

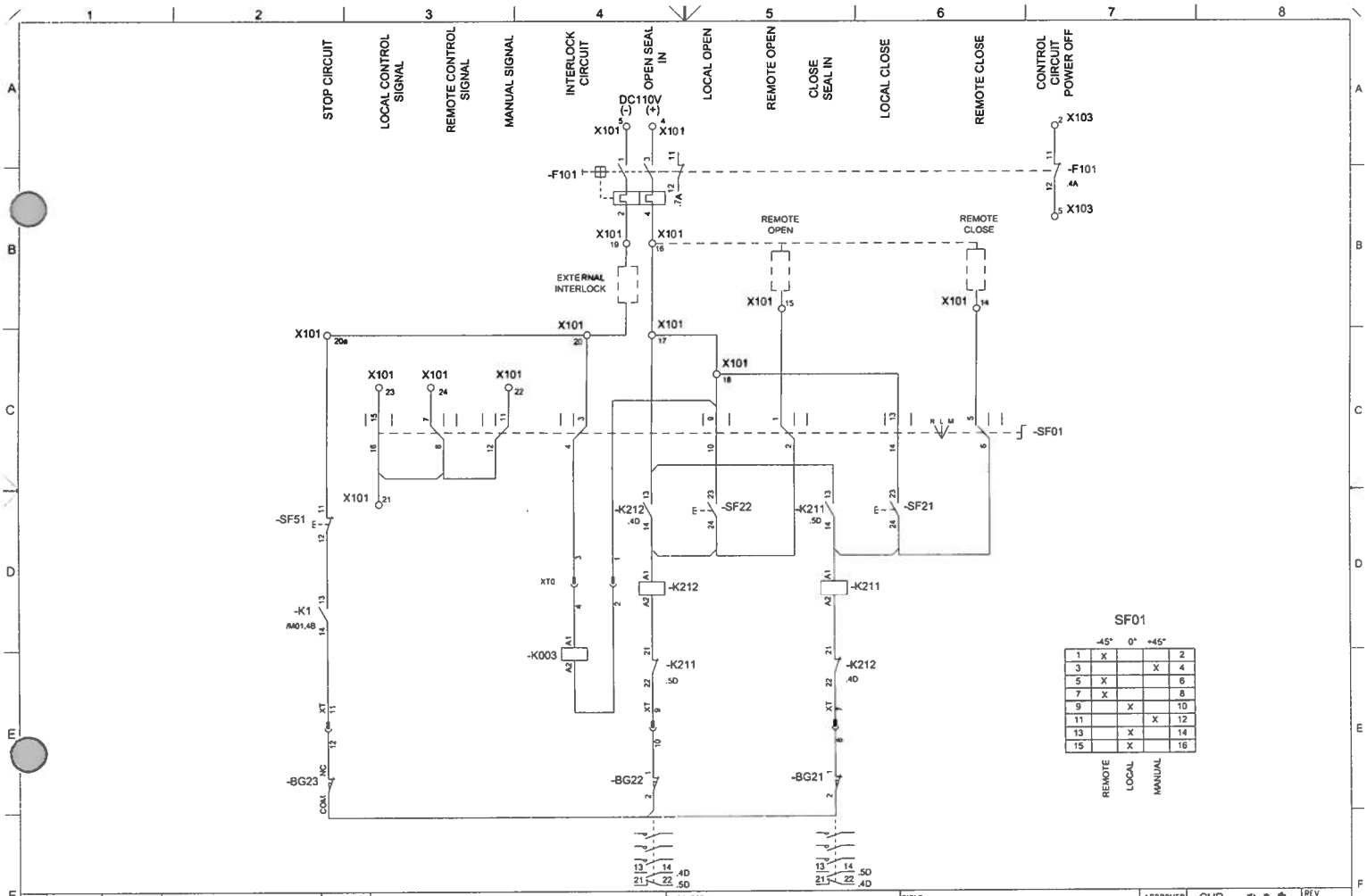

REV	DATE	BY	DESCRIPTION	STATUS
3				
2				
1				

Sieyuan JIANGSU RUGAO HIGH VOLTAGE ELECTRIC APPARATUS CO.,LTD.

PROJECT: Electrical schematic drawing of SRCJ2-3

TITLE: Control circuit

DRAWING NO: 0SR.352.271.1

APRROVED	CHR	
CHECKED	ZY	
DRAWN	LT	
DATE		

REV

SHT M02

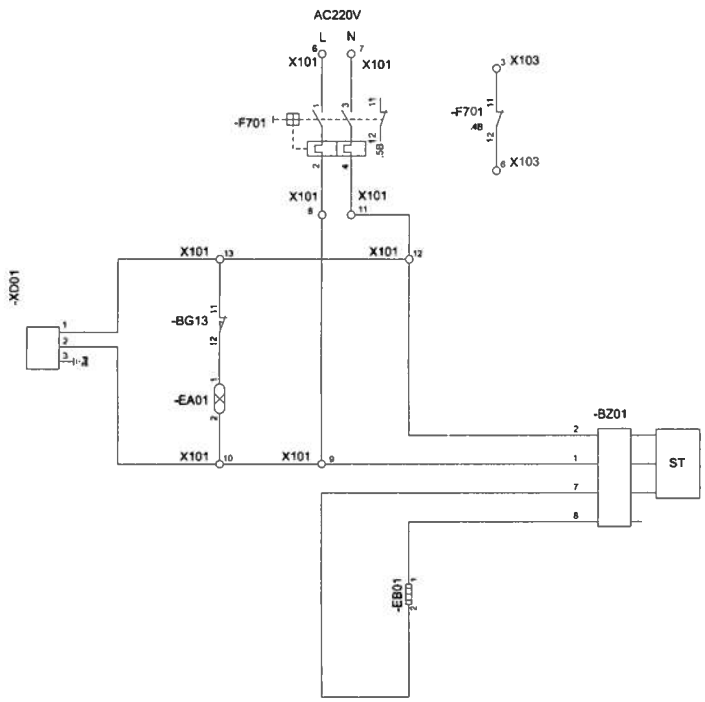

REV	DATE	BY	DESCRIPTION	STATUS
3				
2				
1				

Sieyuan JIANGSU RUGAO HIGH VOLTAGE ELECTRIC APPARATUS CO.,LTD.

PROJECT: Electrical schematic drawing of SRCJ2-3

TITLE: Heater and Lighting

DRAWING NO: 0SR.352.271.1

APRROVED	CHR	
CHECKED	ZY	
DRAWN	LT	
DATE		

REV

SHT M03

External Cable	External Destination				Terminal Block						General Remarks				Internal Cable
					Terminal Segment	Terminal Number	Type	Jumper Wire	Comment	Representation					
Device Comment	Function	Unit	Device	Pin		Terminal Block:X101 Number of Terminals:25					Function	Unit	Device	Pin	Device Comment
						1				M01.4A			-F501	3	MCB
						2				M01.4A			-F501	1	MCB
						3									
						4				M02.4A			-F101	3	MCB
						5				M02.4A			-F101	1	MCB
						6				M03.4B			-F701	1	MCB
						7				M03.4B			-F701	3	MCB
						8		⊖		M03.4C			-F701	2	MCB
						9		⊖		M03.4D			-BZ01	1	Temperature humidity controller
Socket			-XD01	2		10		⊖		M03.3D			-EA01	2	Lamp
						11		⊖		M03.4C			-F701	4	MCB
						12		⊖		M03.4C			-BZ01	2	Temperature humidity controller
Socket			-XD01	1		13		⊖		M03.3C			-BG13	11	Limit switch
						14				M02.6B			-SF01	5	
						15				M02.5B			-SF01	1	
						16		⊖		M02.4B			-F101	4	MCB
						17		⊖		M02.4C			-K212	13	1-NO
7-NO			-SF01	13		18		⊖		M02.5C			-SF01	9	
						19				M02.4B			-F101	2	MCB
						20		⊖		M02.4C			-SF01	3	2-NO
						20a		⊖		M02.2C			-SF51	11	Stop button
						21				M02.3D			-SF01	18	8-NO
						22				M02.3C			-SF01	11	6-NO
						23				M02.3C			-SF01	15	8-NO
						24				M02.3C			-SF01	7	4-NO

Rev	DATE	BY	DESCRIPTION	STATUS
3				
2				
1				

Sieyuan JIANGSU RUGAO HIGH VOLTAGE ELECTRIC APPARATUS CO.,LTD.

PROJECT: Electrical schematic drawing of SRCJ2-3

TITLE: Terminal Block Diagram

DRAWING NO: 0SR.352.271.1

APPROVED	CHR	REV
CHECKED	ZY	
DRAWN	LT	SHT M04
DATE		

External Cable	External Destination				Terminal Block						General Remarks				Internal Cable
					Terminal Segment	Terminal Number	Type	Jumper Wire	Comment	Representation	Internal Destination				
Device Comment	Function	Unit	Device	Pin	Terminal Block:X102 Number of Terminals:32						Function	Unit	Device	Pin	Device Comment
						1				M01.2E			-BG11	1	
						2				M01.2E			-BG11	2	
						3				M01.2F			-BG11	3	
						4				M01.2F			-BG11	4	
						5				M01.2E			-BG11	5	
						6				M01.3E			-BG11	6	
						7				M01.2F			-BG11	7	
						8				M01.3F			-BG11	8	
						9				M01.3E			-BG11	9	
						10				M01.4E			-BG11	10	
						11				M01.3F			-BG11	11	
						12				M01.4F			-BG11	12	
						13				M01.4E			-BG11	13	
						14				M01.4E			-BG11	14	
						15				M01.4F			-BG11	15	
						16				M01.4F			-BG11	16	
						17				M01.5E			-BG11	17	
						18				M01.5E			-BG11	18	
						19				M01.5F			-BG11	19	
						20				M01.5F			-BG11	20	
						21				M01.5E			-BG11	21	
						22				M01.6E			-BG11	22	
						23				M01.5F			-BG11	23	
						24				M01.6F			-BG11	24	
						25				M01.6E			-BG11	25	
						26				M01.7E			-BG11	26	
						27				M01.6F			-BG11	27	
						28				M01.7F			-BG11	28	
						29				M01.7E			-BG11	29	
						30				M01.7E			-BG11	30	
						31				M01.7F			-BG11	31	
						32				M01.7F			-BG11	32	

Rev	DATE	BY	DESCRIPTION	STATUS
3				
2				
1				

Sieyuan JIANGSU RUGAO HIGH VOLTAGE ELECTRIC APPARATUS CO.,LTD.

PROJECT: Electrical schematic drawing of SRCJ2-3

TITLE: Terminal Block Diagram

DRAWING NO: 0SR.352.271.1

APRROVED	CHR	
CHECKED	ZY	
DRAWN	LT	
DATE		

REV.

SHT: M05

External Cable	External Destination				Terminal Block						General Remarks				Internal Cable
					Terminal Segment	Terminal Number	Type	Jumper Wire	Comment	Representation	Internal Destination				
Device Comment	Function	Unit	Device	Pin		Terminal Block:X103 Number of Terminals:8					Function	Unit	Device	Pin	Device Comment
						1				M01.5A			-F501	11	
						2				M02.7A			-F101	11	
						3				M03.5B			-F701	11	
						4				M01.5B			-F501	12	
						5				M02.7B			-F101	12	
						6				M03.5B			-F701	12	
						7				M01.3B			-K1	21	
						8				M01.3B			-K1	22	

Rev	DATE	BY	DESCRIPTION	STATUS
3				
2				
1				

Sieyuan JIANGSU RUGAO HIGH VOLTAGE ELECTRIC APPARATUS CO.,LTD.

PROJECT: Electrical schematic drawing of SRCJ2-3

TITLE: Terminal Block Diagram

DRAWING NO: 0SR.352.271.1

APPROVED	CHR	REV
CHECKED	ZY	
DRAWN	LT	SHT
DATE		M06

Keyvare Trade S.A

No.	Code	Name	Type	Manufacturer	Remark
1	-BG11	Auxiliary switch	F6-16 II/W2 (8 NO 8 NC)	Kexing/Guangda	
2	-BG13	Limit switch	LXW18-11Z	Shanghai Feili	
3	-BG21	Limit switch	LXW18-11MB	Shanghai Feili	
4	-BG22	Limit switch	LXW18-11MB	Shanghai Feili	
5	-BG23	Limit switch	LXW16.11-202	Shanghai Feili	
6	-BZ01	Temperature humidity controller	DWS-13DX-3W	Jiangsu Lide	
7	-EA01	Lamp	LED	Rugao Yuquan	
8	-EB01	Heater	PTC-50W	Jiangsu Lide	
9	-F101	MCB	NDB2Z-63 C10/2 DC	Liangxin	
10	-F501	MCB	NDB2Z-63 C3/2 DC	Liangxin	
11	-F701	MCB	NDB1A-63 C10/1	Liangxin	
12	-K1	Relay	MBC6-9/22 DC	Melle	
13	-K003	Electromagnetic lock	DSN-I/Y		
14	-K211	Contactor	LC1D09MDC	Schneider	
15	-K212	Contactor	LC1D09MDC	Schneider	
16	-MA11	Motor	370W	Jiangsu Jiuyuan	
17	-SF01	Selector switch for remote and local control	LW38D-164D9410/4 TH	Jiangyin Changjiang	
18	-SF21	Close button	LA38-10/206B(RED)	Jiangyin Changjiang	
19	-SF22	Open button	LA38-10/206B(GREEN)	Jiangyin Changjiang	
20	-SF51	Stop button	LA38-01/206B(BLACK)	Jiangyin Changjiang	
21	-XD01	Socket	220V AC 10A		
22	X101	Terminals X101	RUK5N 4m²	Shanghai Hangtong	
23	X102	Terminals X102	RUK5N 4m²	Shanghai Hangtong	
24	X103	Terminals X103	RUK5N 4m²	Shanghai Hangtong	
25	XT	Terminals	RUK5N 4m²	Shanghai Hangtong	
26	XT0	Terminals	RUK5N 4m²	Shanghai Hangtong	

REV	DATE	BY	DESCRIPTION	STATUS
3				
2				
1				

Sieyuan JIANGSU RUGAO HIGH VOLTAGE ELECTRIC APPARATUS CO.,LTD.

PROJECT: Electrical schematic drawing of SRCJ2-3

TITLE: Bill of Material

DRAWING NO: 0SR.352.271.1

APPROVED	CHR	
CHECKED	ZY	
DRAWN	LT	
DATE		

REV

SHT. Z01

Kawara Trade S.A