GRUPO LUMINOTECNIA
Pasión por crecer juntos

Nota Piro´y N° 163/2022

Asunción, 5 de Julio del 2022

Señores
ADMINISTRACIÓN NACIONAL DE ELECTRICIDAD (ANDE)
Avda. España No. 1268
Asunción – Paraguay

Ref.: CONTRATACIÓN DIRECTA ANDE N° 6538/2022 "ADQUISICIÓN DE DESCARGADORES DE SOBRETENSION PARA MEDIA TENSION" ID N° 414.005

De nuestra mayor consideración:

Nos es grato dirigirnos a usted y por vuestro digno intermedio a donde corresponda, en el marco del llamado de referencia, y en respuesta a la **NOTA CEO N° 04**, recibida en fecha 04/07 a fin de hacer entrega de los documentos solicitados en la misma.

En espera de una atención favorable a esta presentación, aprovechamos la oportunidad para saludarle con nuestra mayor estima y consideración.

Muy atentamente.

Lic. Abelardo Brugada
Representante Legal
Piro'y S.A.

Firma.....
Lic. Abelardo Brugada
En Calidad de Representante Legal
PIRO`Y S.A.
::::::::::::::::::::::::::::::::
Tel.: (021) 249 2000
Avda. Artigas 988 c/ Cusmanish
Asunción, Paraguay
PIRO'Y S.A.

GRUPO LUMINOTECNIA
Pasión por crecer juntos

Nota Piro´y N° 163/2022

Asunción, 5 de Julio del 2022

Señores
ADMINISTRACIÓN NACIONAL DE ELECTRICIDAD (ANDE)
Avda. España No. 1268
Asunción – Paraguay

Ref.: CONTRATACIÓN DIRECTA ANDE N° 6538/2022 "ADQUISICIÓN DE DESCARGADORES DE SOBRETENSION PARA MEDIA TENSION" ID N° 414.005

De nuestra mayor consideración:

Nos es grato dirigirnos a usted y por vuestro digno intermedio a donde corresponda, en el marco del llamado de referencia, y en respuesta a la **NOTA CEO N° 04**, recibida en fecha 04/07 a fin de hacer entrega de los documentos solicitados en la misma.

En espera de una atención favorable a esta presentación, aprovechamos la oportunidad para saludarle con nuestra mayor estima y consideración.

Muy atentamente.

Justa E. Leite Figueredo
Representante Legal
Piro'y S.A.

Firma.....
Lic. Justa Elizabeth Leite Figueredo
En Calidad de Representante Legal
PIRO`Y S.A.
::::::::::::::::::::::::::::::::
Tel.: (021) 249 2000
Avda. Artigas 988 c/ Cusmanish
Asunción, Paraguay
PIRO'Y S.A.

Type Test Report

Document No.	B7018645	Copy No.	1	Number of pages	24

Apparatus	Housing of polymer-housed surge arrester, classified "distribution DH", for outdoor installation. Rated voltage = 54 kV; Nominal discharge class = 10 kA
Designation	PA-DM-54
Serial Number	368160
Manufacturer	JSC Polymer-Apparat
Client	JSC Polymer-Apparat Ak. Konstantinova Strasse, 195427 Saint-Petersburg - Russia Federation
Tested for	----
Date(s) of tests	September 19, 2017
Tested by	CESI S.p.A. Via Rubattino, 54 20134 Milano – Italy
Test performed	Insulation withstand tests on polymer-housed surge arresters (sub-clause 10.8.2): - dry lightning impulse voltage test (clause 8.2.6) - wet power-frequency voltage test (clause 8.2.8)

The apparatus, constructed in accordance with the description, drawings and photographs incorporated in this document has been subjected to the series of proving tests in accordance with:

IEC 60099-4 - Edition 3.0 (2014-06)

The results are shown in the record of proving tests and the oscillograms attached hereto. The values obtained and the general performance are considered to comply with the above Standard(s). The ratings assigned by the Manufacturer are listed on the ratings page.
The document applies only to the apparatus tested. The responsibility for conformity of any apparatus having the same designations with that tested rests with the Manufacturer.

October 25, 2017		
	Del Giorgio Carlo B7018645 2969 AUT	The Manager - Arcidiaco Lorenzo B7018645 821814 APP
Date	Test Engineer in charge	Approved By Document Digitally Signed

Partial reproduction of this document is permitted only with the written permissions from CESI Group.
The authenticity of this document is guaranteed by the integrity of hologram.

ilac-MRA

ACCREDIA
ENTE ITALIANO DI ACCREDITAMENTO
LAB N° 0030

The laboratory meets the requirements of the Standard EN ISO/IEC 17025: 2005 "General Requirements for the Competence of Testing and Calibration Laboratories". The in force status of the accreditation and the list of accredited tests may be checked in the WEB site: www.accredia.it

测思 Centro Elettrotecnico Sperimentale Italiano

Lic. Abelardo Brugada
Representante Legal
Piro'y S.A.

CESI

Trust the Power of Experience

PAD B7018645 (2438542) - CONFIDENTIAL USE

Notes

STL-Member

CESI Group members are founder members of the SHORT-CIRCUIT TESTING LIAISON (STL) which has been established in 1969. STL is a forum for voluntary international cooperation of testing organizations.

CESI Group Test Documents description

Type Test Certificate of .....

Issued for type tests of high voltage products (> 1 kV_{ac}; > 1,5 kV_{dc}), which have successfully been carried out in full compliance with the relevant specifications or standards and STL Guides valid at the time of the test. The Type Test Certificate consists of documents unequivocally identifying the test object and describes all conditions under which the tests were conducted. It gives evidence of the unobjectionable behavior of the test object during the tests in line with the normative documents applied as well as of the results of successful testing.

Test Certificate of (complete / selected) Type Tests

Issued if type tests of low voltage products (< 1 kV_{ac}; < 1,5 kV_{dc}) requested by the relevant product standard were passed. For these tests the equipment under test must be clearly identified by technical description, drawings, and additional specifications.

Certificate of Design Verification

Issued for passed design verification tests according to IEC 61439. For these tests the equipment under test must be clearly identified by technical description, drawings, and additional specifications.

Type Test Report

Issued for high and low voltage products if parts of selected type tests have been passed; those shall be carried out in full compliance with the relevant standards but (for high voltage products) do not fulfill all STL requirements for issuing a Type Test Certificate. For these tests the equipment under test must be clearly identified by technical description, drawings, and additional specifications.

Test Report

Issued for all other tests on high and low voltage products which have been carried out according to specifications, standards and/or client instructions

On-Site Test Record

Issued as a record of results acquired during the on-site tests / measurements

Test Award

Can be additionally issued for all named types of test documents above if the tests to be referenced were passed

Lic. Abelardo Brugada
Representante Legal
Piro'y S.A

Tests witnessed by:

Mr Alexander Kolychev - JSC Polymer-Apparat
Mr Anton Potapov - JSC Polymer-Apparat

Identification of the object: effected

The Manufacturer guarantees that the tested object is manufactured according to the submitted drawing.
CESI checked that this drawing adequately represents in shape and dimensions the essential details and the parts of the tested object.
This drawing, identified by CESI and numbered **B7021732 No.1**, is annexed to this document.

Test evaluation
With reference to the Standards/Specifications listed in the first page and the characteristics of the tested sample assigned by manufacturer, the carried out tests passed SUCCESSFULLY.

Revision No.	Date	Reference
0	October 25, 2017	B7018645

The data necessary to permit repetition of the tests are contained in the document marked: -----

The reported expanded uncertainties are determined in accordance with the Publication JCGM 100 "Evaluation of measurement data - Guide to the expression of uncertainty in measurement" and are based on a standard uncertainty multiplied by a coverage factor k = 2, which for a normal distribution provides a level of confidence of approximately 95 %.

Peak voltage (impulse tests)	± 3,0 %
Voltage a.c., d.c. (dielectric tests)	± 3,0 %
Peak current (impulse tests)	± 3,0 %
Time parameters (impulse tests)	± 10 %
Time parameters (a.c., d.c. dielectric tests)	± 3,5 %
Partial discharge measurement	up to 10 pC: ± 1,0 pC above 10 pC: ± 10 %

Atmospheric conditions:

Temperature;	Pressure;	Relative Humidity (30 % to 95 % RH)	± 2,0 °C;	± 1,0 hPa;	± 5 %

Laboratory information

Receipt date of the sample	September 18, 2016
Test location	CESI – Via Rubattino 54 – Milan
CESI testing team	Mr L. Tiziani
Test laboratory	P180 (100 kJ)
ODV	70006781

Lic. Abelardo Brugaa
Representante Legal
Piro'y S.a

ACCREDIA
LAB N° 0030

content	page	test date
Rated characteristics of the tested object assigned by the Client	5	----
Test requirements	6	----
procedure and results	7	----
Lightning impulse voltage test (dry)	8	September 19, 2017
Power-frequency voltage test (wet)	9	September 19, 2017
Circuit A0002 – impulse generator	10	----
Circuit A0058 – Power frequency test circuit	11	----
Circuit A0059 – Power frequency measuring circuit	12	----
Photograph of the test object	13	----
Photograph of the test arrangement	14	----

Pages annexed:

- Oscillogram (total pages:9)

Reference document annexed:

- Drawing identified by CESI and numbered **B7021732 No.1**

Lic. Abelardo Brugada
Representante Legal
Piro'y S.A.

Rated characteristics of the tested object assigned by the Client

Housing of polymer-housed surge arrester	
Manufacturer	**JSC Polymer-Apparat** -Ak. Konstantinova Str.,1 - 195427 Saint-Petersburg - Russia Federation
Type	PA-DM-54
Drawing No.	PA.0PN.035.002.054.H (dated 03.17)
Arrester classification	Distribution DM
Type of installation	outdoor
Serial number	368160
Rated voltage (U_r)	54 kV
Continuous operating voltage (U_c)	43,2 kV
Rated frequency	48÷62 Hz
Nominal discharge current (8/20 µs impulse shape)	10 kA
Maximum residual voltage of the arrester for the nominal discharge current (LIPL)	133,9 kV
IEC required dry lightning impulse withstand voltage (*)	174,1 kV_{peak}
IEC required wet power-frequency withstand voltage (**)	117,8 kV_{peak}
Test value declared by the Client of dry lightning impulse withstand voltage	240,0 kV_{peak}
Test value declared by the Client of wet power-frequency withstand voltage	150,0 kV_{peak}
Number of sheds of the housing	12 big and 11 small

(*) calculated as 1,3 times the maximum residual voltage of the arrester at nominal discharge current (LIPL)

(**) calculated as 0,88 times the lightning impulse protection level (LIPL)

NOTE:
the lightning impulse protection level (LIPL or U_{pl}) is the maximum residual voltage of the arrester for the nominal discharge current

Lic. Abelardo Brugada
Representante Legal
Piro'y S.A.

ACCREDIA
LAB N° 0030

Test requirements

IEC 60099-4, Edition 3.0 (2014-06) – clause 2 "Normative references"
The following documents, in whole or in part, are normatively referenced in this document and are indispensable for its application. For dated references, only the edition cited applies. For undated references, the latest edition of the referenced document (including any amendments) applies.

IEC 60060-1, *High-voltage test techniques – Part 1: General definitions and test requirements*
IEC 60060-2, *High-voltage test techniques – Part 2: Measuring systems*

Test requirements
Below is an excerpt of the reference standards regarding to insulation withstand tests on polymer-housed surge arrester object of this Test Report.

IEC 60099-4 clause 10 "Test requirements on polymer-housed surge arresters", sub-clause 10.8.2 "Insulation withstand tests" and sub-clause 8.2 "Insulation withstand tests".

The voltage withstand tests demonstrate the voltage withstand capability of the external insulation of the arrester housing. For other designs the test has to be agreed upon between the manufacturer and the user.

The outside surface of insulating parts shall be carefully cleaned and the internal parts removed or rendered inoperative to permit these tests.

For arresters intended for use on systems of $Us \leq 245$ kV, lightning impulse voltage tests according to 8.2.6 and power-frequency voltage tests according to 8.2.8 shall be performed on individual unit housings.

The applicable tests shall be run on the longest arrester housing. If this does not represent the highest specific voltage stress per unit length, additional tests shall be performed on the unit housing having the highest specific voltage stress. For the test, the MO resistors shall be removed from the housing or replaced by insulators.

The voltage to be applied during a withstand test is determined by multiplying the specified withstand voltage by the correction factor taking into account density and humidity (see IEC 60060-1).

Humidity correction shall not be applied for wet tests.

The external insulation of outdoor arresters shall be subjected to wet withstand tests under the test procedure given in IEC 60060-1.

Lightning impulse voltage test (sub-clause 8.2.6)
The arrester shall be subjected to a standard lightning impulse voltage dry test according to IEC 60060-1. The test voltage shall be at least 1,3 times the maximum residual voltage of the arrester at nominal discharge current.

Fifteen consecutive impulses at the test voltage value shall be applied for each polarity. The arrester shall be considered to have passed the test if no internal disruptive discharges occur and if the number of the external disruptive discharges does not exceed two in each series of 15 impulses. The test voltage shall be equal to the lightning impulse protection level of the arrester multiplied by 1,3.

Power-frequency voltage test (sub-clause 8.2.8)
The housings of arresters intended for outdoor use shall be tested in wet conditions, and housings of arresters intended for indoor use shall be tested in dry conditions.

Housings of distribution class arresters according to Table 1 shall withstand a power-frequency voltage with a peak value equal to the lightning impulse protection level multiplied by 0,88 for a duration of 1 min.

Lic. Abelardo Brunac
Representant
Piro'y S

ACCREDIA
LAB N° 0030

Test procedure and results

The Client had removed or rendered inoperative the internal parts of the surge arrester to permit these tests.
The outside surface of insulating parts was cleaned.

The arrester housing was arranged for the tests as shown on photograph No.3.
The end terminal of the arrester housing was fixed to the earth.

The test voltage was applied between the upper line terminal of the arrester housing and its end terminal connected to the metallic support and earth.

The sample was identified by its serial number 368160.

Lightning impulse voltage test (sub-clause 8.2.6)
The housing of surge arrester was subjected to a standard lightning impulse voltage dry test according to IEC 60060-1.

The applied voltage was the test voltage value declared by the Client corrected for atmospheric conditions at the time of the test.

The test voltage value declared by the Client was higher than the value calculated according to the procedure of IEC 60099-4 (1,3 times the maximum residual voltage of the arrester at nominal discharge current), therefore it is comply with the requirements of the relevant Standard.

Fifteen consecutive impulses at the determined test voltage value were applied for each polarity.

During the test no internal disruptive discharges and no external disruptive discharges occurred.

Therefore the housing of the surge arrester passed the lightning impulse voltage test

Power-frequency voltage test (sub-clause 8.2.8)
The housing of surge arrester was subjected to a power-frequency withstand voltage test in wet conditions.

The characteristics of the rain were according to IEC 60060-1.

The applied voltage was the test voltage value declared by the Client corrected for atmospheric conditions at the time of the test.

The test voltage value declared by the Client was higher than the value calculated according to the procedure of IEC 60099-4 (calculated as a peak value equal to the lightning impulse protection level multiplied by 0,88), therefore it is comply with the requirements of the relevant Standard.

The test sample withstood for one minute the applied voltage.

Therefore the housing of the surge arrester passed the wet power-frequency voltage test

Lic. Abelardo Brugada
Representante Legal
Piro'y S.A.

ACCREDIA
LAB N° 0030

A1017IG

Lightning impulse voltage test (dry)

Test object: Housing of polymer-housed surge arrester, classified "distribution DH", for outdoor installation

circuit: A0002

Arrangement: see photographs of the test set-up

Atmospheric conditions and correction factor			
b kPa	t_a °C	h g / m³	K_t
99,76	18,8	9,88	0,979

Measured arcing distance = 485 mm

Date: September 19, 2017

test sample Serial No.	polarity	impulse generator charging voltage kV/stage	voltage required U kV_{peak}	voltage applied U x K_t kV_{peak}	A: (o) withstand (x) flashover B: oscillogram No. C: peak voltage [kV] D: time to discharge (µs)															
368160	positive	61,3	240,0	235,0	A	o	o	o	o	o	o	o	o	o	o	o	o	o	o	o
					B	3							4							5
					C	235,3	235,1	235,0	235,2	235,6	235,1	235,4	235,0	234,9	235,0	234,6	235,2	234,6	235,1	235,2
					D															
	negative	61,2	240,0	235,0	A	o	o	o	o	o	o	o	o	o	o	o	o	o	o	o
					B	6							7							8
					C	234,7	235,2	235,8	234,8	236,3	235,1	235,1	235,2	235,1	235,2	235,2	235,1	236,0	236,5	235,9
					D															

Lic. Abelardo Brugada
Representante Legal
Piro'y S.A.

Power-frequency voltage test (wet)

Test object: Housing of polymer-housed surge arrester, classified "distribution DH", for outdoor installation
circuit: A0058 – A0059
Arrangement: see photographs of the test set-up

Atmospheric conditions and correction factor			
b kPa	t_d °C	h g / m³	K_t
99,76	20,3	9,71	0,993

Measured arcing distance = 485 mm

Precipitation conditions					
	Precipitation rate (mm/min)			Water temperature °C	Water conductivity µS/cm
vertical	--	1,0	--	20,2	99,4
horizontal	--	1,0	--		

Date: September 19, 2017

test sample	voltage		test voltage				test duration	Test result	Oscillogram	Notes
	required U	applied U x K_t	V_1	$V_{IIV} = k_1 V_1$ (k_1 = ----)	V_3	$V_{IIV} = k_D V_3$ (k_D = 25700)				
Serial No.	kV_{peak}	kV_{peak}	V_{peak}	kV_{peak}	V_{peak}	kV_{peak}	s		No.	
368160	150,0	148,95	----	----	5,80	148,95	60	withstand	9	

Lic. Abelardo Brugada
Representante Legal
Piro'y S.A.

Circuit A0002

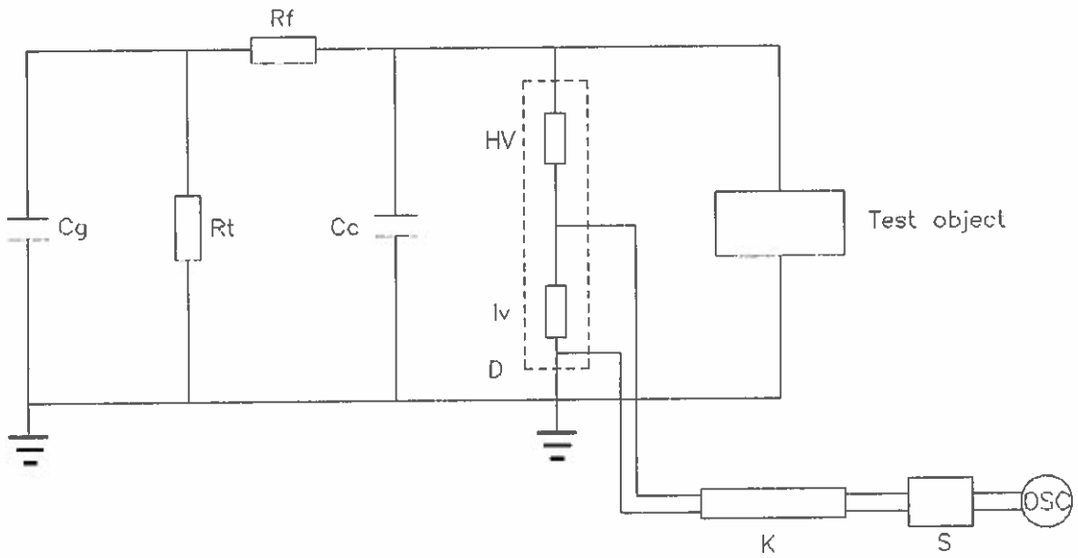

Impulse generator

No. of stages: 4
C_g: 125 nF
R_t: 520 Ω (3x140 + 2//200 Ω)
R_f: 410 Ω (2x140 Ω + 1x60 Ω + 2//60 Ω + 1x40 Ω)
C_C: ---- nF

Voltage measuring system CESI No. 9792
D - divider PASSONI & VILLA type RC series CESI No. 6700; scale factor 25600
HV - high voltage capacitance 600 pF
lv - low voltage unit CESI No. 6704
K - coaxial cable
S - attenuation and termination unit CESI No. 14924
OSC - digital oscilloscope LECROY type HD4096 CESI No. 58202
Data acquisition and calculation software PANDA rel.7.0 May 2017

Measured waveshape			
	polarity	time µs	oscillogram No.
front	positive	1,17	1
tail		51,4	2

Check of the test circuit			
polarity	Charging voltage V_c kV/stage	Measured voltage V_m kV	η $V_m / (V_c \cdot n_{stages})$
positive	57,3	220,4	0,962

Additional measurements:
Reading instruments for atmospheric conditions: Data logger E+E ELEKTRONIK type HUMLOG 20 CESI No.58065
Software for calculation of the correction factor: Fattori UR REL rel 3.1 January 2016

Lic. Abelardo Bruga
Representante Legal
Piro'v S.A.

ACCREDIA
LAB N° 0030

Circuit A0058

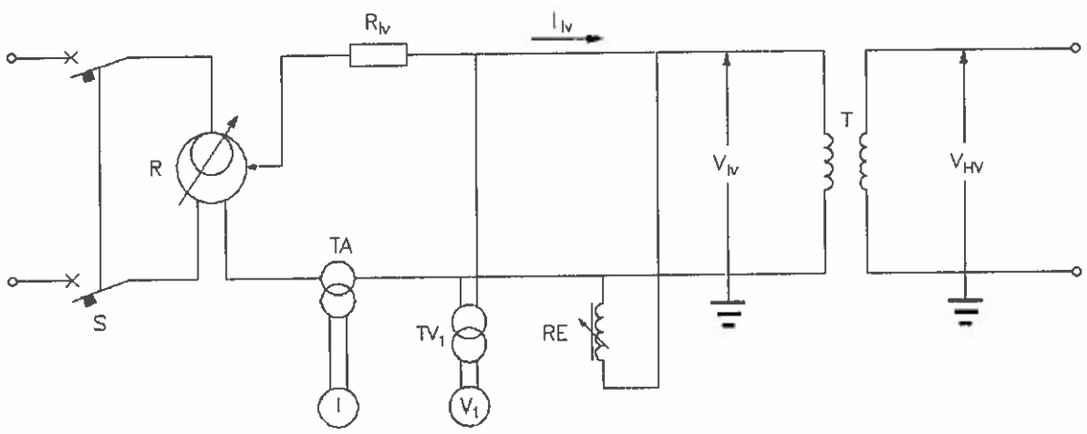

Power frequency test circuit

R	- regulation group PIVI composed by:
	- single-phase voltage converter PIVI; power 210 kVA; voltage 380 V/0÷610 V
	- booster transformer PIVI; power 200 kVA; voltage 600 V /6 kV
R_{lv}	- protection resistor TELEMA; R= 2 Ω
TA	- current transformer type CGS; ratio 50 A/5 A; CESI No.33277
I	- direct reading digital ammeter
TV_1	- voltage transformer type ALSTOM; ratio 6 kV/100 V; CESI No.33276
V_1	- digital voltmeter FLUKE type 8842A; CESI No.05735
RE	- variable reactor (not used)
T	- booster transformer CGE mod. KOC; secondary winding power 700 kVA; voltage 6 kV /350 kV; No. of units 1; ratio 58,33

Tripping of the circuit breaker S

I_N	k_{TA}	setting of instantaneous tripping			setting of time delayed tripping		
		s_1	$s_1 \bullet k_{TA} \bullet I_N$	t_1	s_2	$s_2 \bullet k_{TA} \bullet I_N$	t_2
A	A/A		A	s		A	s
5	10	1	50	0,05	0,5	25	0,05

Additional measurements:

Reading instruments for atmospheric conditions: Data logger E+E ELEKTRONIK type HUMLOG 20 CESI No.58065

Software for calculation of the correction factor: Fattori UR REL rel 3.1 January 2016

Stopwatch CDC ELETTROMECCANICA type TDN46, CESI No.38203

Divided collecting vessel for measurement of precipitation rate CESI, CESI No.38234

Conductivity meter data logger DELTA-OHM type HD 2106.2, CESI No.56181

Lic. Abelardo Brugada
Representante Legal
Piro'y S.A.

ACCREDIA
LAB N° 0030

Circuit A0059

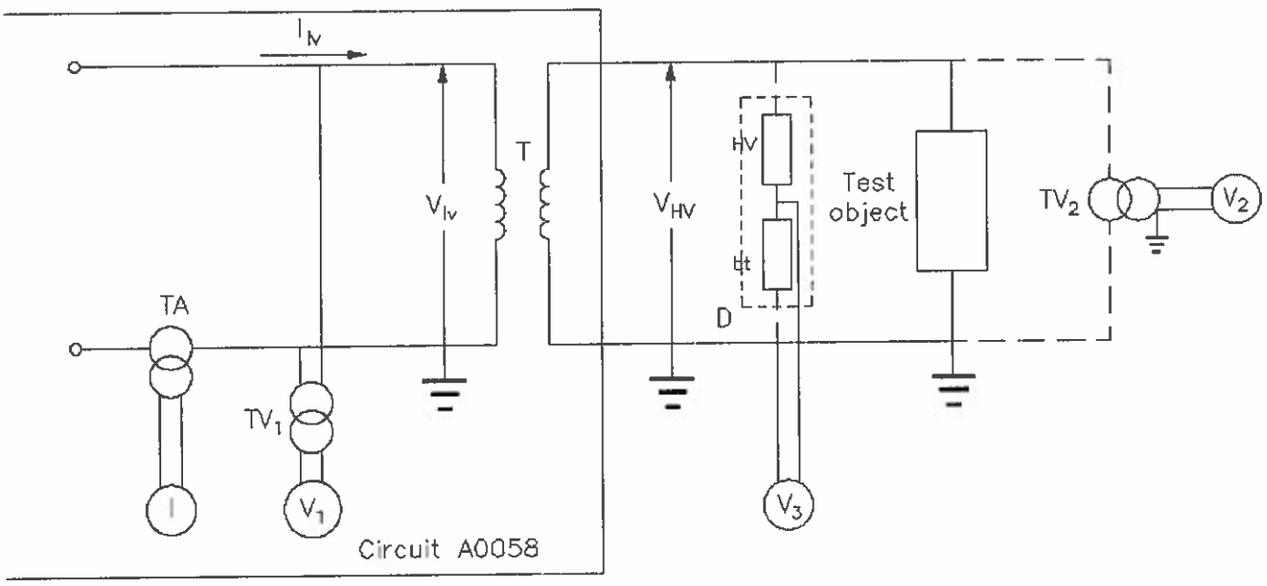

Power frequency measuring circuit

TA - current transformer type CGS; ratio 50 A/5 A; CESI No.33277
I - direct reading digital ammeter
TV_1 - voltage transformer type ALSTOM; ratio 6 kV/100 V; CESI No.33276
V_1 - digital voltmeter FLUKE type 8842A; CESI No.05735

D - divider PASSONI & VILLA type RC series CESI No.06700; scale factor 25700
HV - high voltage capacitance 600 pF
lv - low voltage unit CESI No.06704
K - coaxial cable
S - attenuation and termination unit CESI No.14924
V_3 - digital voltmeter AGILENT type 34401A; CESI No.55077

TV_2 - voltage transformer (not used)
V_2 - digital voltmeter (not used)

Functional check of the test circuit Date: September 19, 2017

Low voltage				High voltage				k_t
				k_2 = ----		k_3 = 25700		
V_1	V_{lv}	I	I_{lv}	V_2	V_{HV}	V_3	V_{HV}	V_{HV} / V_1
$V_{r.m.s.}$	$V_{r.m.s.}$	A	A	$V_{r.m.s.}$	$kV_{r.m.s.}$	$V_{r.m.s.}$	$kV_{r.m.s.}$	Ktheo.= 3500
14,684	881,0	--	0,6	--	--	2,0096	51,65	3517

Lic. Abelardo Brugada
Representante Legal
Piro'y S.A.

ACCREDIA
LAB N° 0030

CESI

Copy No. 1 Certificate No B8023851

Type Test Certificate

of Electrical and Thermal Performance

Test object	Polymer-housed metal-oxide surge arresters
Designation	PA-DM Rated voltage 3 kV to 54 kV Nominal discharge current 10 kA Rated frequency 50/60 Hz
Manufacturer	Joint-Stock Company " Polymer-Apparat" Ak. Kostantinova str., 1 195427 Saint-Petersburg - Russian Federation
Tested for	Joint-Stock Company " Polymer-Apparat" Ak. Kostantinova str., 1 195427 – Saint-Petersburg - Russian Federation
Date(s) of tests	From September 18th, 2017 to February 28th, 2018
Tested by	CESI S.p.A. Via Rubattino, 54 20134 Milano - Italy

The test object, constructed in accordance with the description, drawings and photographs incorporated in this document has been subjected to the series of proving tests in accordance with STL Guides and:

IEC 60099-4 (2014-06)
Sub-clauses 10.8.3 to 10.8.8 and 10.8.15

This Type Test Certificate has been issued by CESI following exclusively the STL Guides.
The results are shown in the record of Proving Tests and the oscillograms attached hereto. The values obtained and the general performance are considered to comply with the above Standard(s) and to justify the ratings assigned by the Manufacturer as listed on the ratings page.
The Certificate applies only to the test object. The responsibility for conformity of any equipment having the same designations with that tested rests with the Manufacturer.

This Certificate comprises 8 sheet in total.

November 23, 2018

Date of issue

Faccheni Fabio
B8023851 3061 AUT
STL Member Laboratory

The Manager - Arcidiaco Lorenzo
B8023851 821814 APP
STL Member Document Digitally Signed

Only integral reproduction of this Certificate, or reproductions of this page accompanied by any page(s) on which are stated the endorsed ratings of the test object, are permitted without written permission from CESI.
The authenticity of this document is guaranteed by the integrity of hologram.

测思 Centro Elettrotecnico Sperimentale Italiano

Lic. Abelardo Brugada
Representante Legal
Piro'v S.A.

PAD B8023851 (25811381) - COMPANY USE

STL

The Short-Circuit Testing Liaison (STL) provides a forum for voluntary international collaboration between testing organisations. The basic aim is the harmonised application of IEC and Regional Standards to the type testing of electrical high-voltage power equipment

LIST OF STL MEMBERS AND RELATED CERTIFICATION BODIES

STL Member	Related Certification Body
CESI * Centro Elettrotecnico Sperimentale Italiano S.p.a. Via Rubattino 54, 20134 Milano MI, Italy	CESI Via Rubattino 54, 20134 Milano MI, Italy
CPRI Central Power Research Institute Post Box No 8066, Prof. Sir C. V. Raman Road Bangalore – 560 080, India	
ESEF Ensemble des Stations d'Essais à Grande Puissance Françaises, EDF-R&D, Avenue des Renardières, 77818 Moret-Sur-Loing Cedex, France	ASEFA 33 avenue du General Leclerc Fontenay aux Roses, France
Intertek (ASTA) Centre Court, Meridian Business Park, Leicester, LE19 1WD, United Kingdom	Intertek Centre Court, Meridian Business Park, Leicester, LE19 1WD, United Kingdom
JSTC Japan Short-Circuit Testing Committee c/o The Japan Electrical Manufacturers' Association, 17-4, Ichiban-cho, Chiyoda-ku, Tokyo 102-0082, Japan	
KEMA KEMA Testing, Inspections & Certification Utrechtseweg 310, 6812 AR Arnhem, The Netherlands	KEMA, Certification Business Unit Utrechtseweg 310, 6812 AR Arnhem, The Netherlands.
KERI Korea Electrotechnology Research Institute 12, Bulmosan-ro 10 beon-gil, Seongsan-gu, Changwon-si, Gyeongsangnam-do, 642-120, South Korea	KERI Certification Korea Electrotechnology Research Institute 12, Bulmosan-ro 10 beon-gil, Seongsan-gu, Changwon-si, Gyeongsangnam-do, 642-120, South Korea
PEHLA Gesellschaft für elektrische Hochleistungsprüfungen Hallenweg 40, 68219 Mannheim, Germany	PEHLA Product Certification Hallenweg 40, D-68219 Mannheim, Germany.
SATS Scandinavian Association for Testing of Electric Power Equipment, c/o SINTEF Energy Research AS 7465 Trondheim, Norway	SATS Certification c/o SINTEF Energy Research, 7465, Trondheim, Norway
STLNA Short-Circuit Testing Liaison of the Nations of the Americas, c/o NEMA, 1300 North 17th Street, Suite 1847 Rosslyn, VA 22209 USA	

Certificates

STL as a collaboration does not itself issue Type Test Certificates. Each STL Member issuing a Type Test Certificate is responsible for the validity and contents of that Certificate. A Type Test Certificate is issued by STL Members based on tests performed by an STL Member Laboratory within their accredited scope to ISO/IEC 17025. If the Type Test Certificate is issued under accreditation of ISO/IEC 17065 the name of the issuing body is the one of the Certification Body related to the STL Member.

Document Digitally Signed

STL Guides

STL Members pledge that when testing for certification to a Standard in respect of which an STL Guide has been issued they will test only in accordance with the agreed interpretation of the Standard as given in the STL Guide. In addition, STL Members have agreed to present Certificates in the form given in the STL General Guide.

For further information contact your local STL Member from the list above. Detailed contact data are available also at www.stl-liaison.org , or contact the Secretariat of STL at: Centre Court, Meridian Business Park, Leicester, LE19 1WD, United Kingdom.
* for additional information on CESI and his Member Laboratories IPH and FGH link to the Members site of STL homepage.

Lic. Abelardo Brugada
Representante Legal
Piro'v S.A.

Table of contents

1 RATINGS ASSIGNED BY THE MANUFACTURER AS PROVED BY THE TESTS 4

2 ADDITIONAL TYPE TESTS 5

3 REFERENCE DOCUMENTS 6

4 ADDITIONAL REFERENCES 6

5 RECORD OF PROVING TESTS 7

6 IDENTIFICATION OF THE APPARATUS 8

Lic. Abelardo Brugada
Representante Legal
Piro'y S.A.

Document Digitally Signed

1 RATINGS ASSIGNED BY THE MANUFACTURER AS PROVED BY THE TESTS

Polymer-housed metal-oxide surge arresters	
Manufacturer	**Joint-Stock Company " Polymer-Apparat"**
Type / Designation	PA - DM
Rated voltage - U_r	3 kV to 54 kV (see details in table at page 5)
Continuous operating voltage - U_c	2,4 kV to 43,2 kV (see details in table at page 5)
Rated frequency	50/60 Hz
Arrester classification	Distribution DH
Nominal discharge current – I_n	10 kA
Repetitive charge transfer rating – Q_{rs}	0,4 C
Thermal charge transfer rating - Q_{th}	1,1 C
Power frequency voltage versus time curve with prior duty	
- for 1 s	1,08 U_r
- for 10 s	1,04 U_r
- for 100 s	1,00 U_r
- for 1000 s	0,96 U_r
Power frequency voltage versus time curve without prior	
- for 10 s	1,13 U_r
- for 1000 s	1,04 U_r
Min. reference voltage at the reference current of 1 mA	2,8 kV to 50,25 kV (see details in table at page 5)
Maximum residual voltage at I_n = 10 kA	7,7 kV to 138,2 kV (see details in table at page 5)

Lic. Abelardo Brugada
Representante Legal
Piro'y S.A.

Document Digitally Signed

The table here below specifies details of the ratings of the surge arresters belonging to the homogeneous series arresters type PA-DM as proved by the type tests

Surge arrester type	Rated [kV]	Continuous operating voltage [kV]	Minimum reference voltage at the reference current of 1 mA [kV]	Maximum residual voltage at In = 10 kA [kV]	Outline drawing (see document B80186 13)
PA – DM-03	3	2,4	2,8	7,7	Figure 2
PA – DM-05	5	4	4,65	12,8	
PA – DM-06	6	4,8	5,60	15,4	
PA – DM-08	8	6,4	7,45	20,5	
PA – DM-09	9	7,2	8,36	23	
PA – DM-10	10	8	9,31	25,6	Figure 4
PA – DM-11	11	8,8	10,25	28,2	
PA – DM-12	12	9,6	11,16	30,7	
PA – DM-13	13	10,4	12,11	33,3	
PA – DM-14	14	11,2	13,02	35,8	
PA – DM-15	15	12	13,96	38,4	
PA – DM-16	16	12,8	14,91	41,0	Figure 5
PA – DM-17	17	13,6	15,82	43,5	
PA – DM-18	18	14,4	16,76	46,1	
PA – DM-19	19	15,2	17,67	48,6	
PA – DM-20	20	16	18,62	51,2	Figure 6
PA – DM-21	21	16,8	19,56	53,8	
PA – DM-22	22	17,6	20,47	56,3	
PA – DM-23	23	18,4	21,42	58,9	
PA – DM-24	24	19,2	22,33	61,4	
PA – DM-25	25	20	23,27	64,0	Figure 7
PA – DM-26	26	20,8	24,22	66,6	
PA – DM-27	27	21,6	25,13	69,1	
PA – DM-28	28	22,4	26,07	71,7	
PA – DM-29	29	23,2	26,98	74,2	
PA – DM-30	30	24	27,93	76,8	Figure 8
PA – DM-33	33	26,4	30,73	84,5	
PA – DM-36	36	28,8	33,53	92,2	
PA – DM-39	39	31,2	36,29	99,8	
PA – DM-42	42	33,6	39,09	107,5	Figure 9
PA – DM-45	45	36	41,89	115,2	
PA – DM-48	48	38,4	44,69	122,9	Figure 10
PA – DM-51	51	40,8	47,49	130,6	Figure 11
PA – DM-54	54	43,2	50,25	138,2	

Document Digitally Signed

2 ADDITIONAL TYPE TESTS

Not applicable.

Lic. Abelardo Brugad
Representante
Piro'y S

3 REFERENCE DOCUMENTS

The following reference documents are integral part of this Certificate:

No.	Description	CESI registration
1	Test report	B7019592
2	Test report	B8001026
3	Test report	B7018719
4	Test report	B7018623
5	Test report	B7019737
6	Test report	B7019962
7	Test Report	B7020147
8	Report *	B8018436
9	Drawing PA-VAR.0400.30 – Varistor B34/30	B7020387
10	Drawing PA-DM.001.ST.01 – Section in thermal model surge arrester PA-DM	B7023130
11	Drawing PA.OPN.035.001.054.00 – Metal-oxide Surge arrester PA-DM-098-54-20/20	B7024013
12	Drawing PA-DM.001.ST.02 – Section on thermal model surge arrester PA-DM	B7024364
13	Drawing PA-LTST.ST.01 – Section for verify long thermal stability	B8004656
14	Manufacturer technical file	B8018613

(*) The Report B8018436 specifies the criteria, adopted for the selection of the test samples and for the calculation of the test parameters, in such a way that a type test carried out on one test specimen can cover at the same time all the surge arresters of the homogeneous

4 ADDITIONAL REFERENCES

Not applicable.

Lic. Abelardo Brugada
Representante Legal
Piro'y S.A.

Document Digitally Signed

5 RECORD OF PROVING TESTS

The table below lists all the tests performed and the references to the relevant Test Reports containing the test values.

No. Standard and clause	Description of tests	Reference documents
IEC 60099-4 Sub-clause 10.8.3	Residual voltage tests	B7019592 B8018 436 B8018613
IEC 60099-4 Sub-clause 10.8.4	Test to verify long term stability under continuous operating voltage	B8001026 B8018 436 B8018613
IEC 60099-4 Sub-clause 10.8.5	Test to verify the repetitive charge transfer rating, Qrs	B7018719 B8018 436 B8018613
IEC 60099-4 Sub-clause 10.8.6	Heat dissipation behaviour of test sample	B7018623 B8018 436 B8018613
IEC 60099-4 Sub-clause 10.8.7	Operating duty test (invalid test)	B7019737 B8018 436 B8018613
IEC 60099-4 Sub-clause 10.8.7	Operating duty test	B7019962 B8018 436 B8018613
IEC 60099-4 Sub-clause 10.8.8	Power frequency voltage-versus-time test	B7020147 B8018 436 B8018613
IEC 60099-4 Sub-clause 10.8.15	Test to verify the dielectric withstand of the internal component (see note 1 below)	n.a.

Note 1: The test to verify the dielectric withstand of the internal components is not required since the operating duty test has been carried out on a dielectrically arrester prorated section

Lic. Abelardo Brugada
Representante Legal
Piro'y S.A.

6 IDENTIFICATION OF THE APPARATUS

The Manufacturer guarantees that the tested apparatus is manufactured according to the submitted drawings.
CESI checked that these drawings adequately represent in shape and dimensions the essential details and the main parts of the tested apparatus.
These drawings identified by CESI and numbered
- B7020387 No.1
- B7023130 No.1
- B7024013 No.1
- B7024364 No.1
- B8004656 No.1

have been annexed to the relevant test report.

Lic. Abelardo Brugada
Representante Legal
Piro'y S.A.

Test Report

Document No.	B7019592	Copy No.	1	Number of pages	28
Apparatus	MO resistors type B34/30				
Designation	---				
Serial Number	---				
Manufacturer	Joint-Stock Company " Polymer-Apparat"				
Client	Joint-Stock Company " Polymer-Apparat Ak. Kostantinova Strasse, 1 195427 – Saint-Petersburg - Russian Federation				
Tested for	---				
Date(s) of tests	September 27-28, 2017				
Tested by	CESI S.p.A. Via Rubattino, 54 20134 Milano - Italy				
Test performed	Residual voltage tests				

The apparatus, constructed in accordance with the description, drawings and photographs incorporated in this document has been subjected to the series of proving tests in accordance with:

IEC 60099-4 – Edition 3.0 (2014-06)

The results are shown in the record of proving tests and the oscillograms attached hereto. The ratings assigned by the Manufacturer are listed on the ratings page.
The document applies only to the apparatus tested. The responsibility for conformity of any apparatus having the same designations with that tested rests with the Manufacturer.

November 9, 2017

Date	Gregori Marco B7019592 3056 AUT Test Engineer in charge	The Manager - Arcidiaco Lorenzo B7019592 821814 APP Approved By Document Digitally Signed

Partial reproduction of this document is permitted only with the written permissions from CESI Group.
The authenticity of this document is guaranteed by the integrity of hologram.

ilac-MRA

ACCREDIA
ENTE ITALIANO DI ACCREDITAMENTO
LAB N° 0030

The laboratory meets the requirements of the Standard EN ISO/IEC 17025: 2005 "General Requirements for the Competence of Testing and Calibration Laboratories". The in force status of the accreditation and the list of accredited tests may be checked in the WEB site: www.accredia.it

测思 Centro Elettrotecnico Sperimentale Italiano

CESI
Trust the Power of Experience

Lic. Abelardo Brugada
Representante Legal
Piro'y S.A.

PAD B7019592 (2437407) - CONFIDENTIAL USE

Notes

STL-Member

CESI Group members are founder members of the SHORT-CIRCUIT TESTING LIAISON (STL) which has been established in 1969. STL is a forum for voluntary international cooperation of testing organizations.

CESI Group Test Documents description

Type Test Certificate of .....

Issued for type tests of high voltage products (> 1 kV_{ac}; > 1,5 kV_{dc}), which have successfully been carried out in full compliance with the relevant specifications or standards and STL Guides valid at the time of the test. The Type Test Certificate consists of documents unequivocally identifying the test object and describes all conditions under which the tests were conducted. It gives evidence of the unobjectionable behavior of the test object during the tests in line with the normative documents applied as well as of the results of successful testing.

Test Certificate of (complete / selected) Type Tests

Issued if type tests of low voltage products (< 1 kV_{ac}; < 1,5 kV_{dc}) requested by the relevant product standard were passed. For these tests the equipment under test must be clearly identified by technical description, drawings, and additional specifications.

Certificate of Design Verification

Issued for passed design verification tests according to IEC 61439. For these tests the equipment under test must be clearly identified by technical description, drawings, and additional specifications.

Type Test Report

Issued for high and low voltage products if parts of selected type tests have been passed; those shall be carried out in full compliance with the relevant standards but (for high voltage products) do not fulfill all STL requirements for issuing a Type Test Certificate. For these tests the equipment under test must be clearly identified by technical description, drawings, and additional specifications.

Test Report

Issued for all other tests on high and low voltage products which have been carried out according to specifications, standards and/or client instructions

On-Site Test Record

Issued as a record of results acquired during the on-site tests / measurements

Test Award

Can be additionally issued for all named types of test documents above if the tests to be referenced were passed

Lic. Abelardo Brugada
Representante Legal
Piro'y S.A.

Tests witnessed by:

---- ----

Identification of the object: Requested

The Manufacturer guarantees that the tested object is manufactured according to the submitted drawings.
CESI checked that these drawings adequately represent in shape and dimensions the essential details and the parts of the tested object.
These drawing, identified by CESI and numbered B7020387 No. 1 , is annexed to this document.

The reported expanded uncertainties are determined in accordance with the Publication JCGM 100 "Evaluation of measurement data – Guide to the expression of uncertainty in measurement" and are based on a standard uncertainty multiplied by a coverage factor K=2, which for a normal distribution provides a level of confidence of approximately 95%

- Voltage a.c.	: **± 3,0%**
- Residual peak voltage (impulse tests)	: **± 3,0%**
- Current a.c.	: **± 3,0%**
- Peak current (impulse tests)	: **± 3,0%**
- Time (impulse tests)	: **± 10,0%**
- Time (a.c. tests)	: **± 1,5%**

Laboratory information

Receipt date of the sample	September 2017
Test location	CESI – Via Rubattino 54 – Milan
CESI testing team	Mr. L. Podavitte, Mr. I Guacci
Test laboratory	P177 (Surge Arrester laboratory)
ODV SAP	70006781

Lic. Abelardo Brugada
Representante Legal
Piro'y S.A.

ACCREDIA
LAB N° 0030

content	page	test date
Test object characteristics	5	
) of the test sample	6	
Reference standard	7	
Test carried out	7	
Test object identification	7	
Test procedure	8	
Lightning impulse residual voltage test	9 to 10	September 27, 2017
Steep current impulse residual voltage test (measurement of inductive error)	11	September 28, 2017
Steep current impulse residual voltage test	12	September 28, 2017
Technical data	from page 13 to 14	

PAGES ANNEXED:

Oscillograms no. 13 pages

Client's drawing - CESI no.B7020387 no. 1 page

Lic. Abelardo Brugada
Representante Legal
Piro'y S.A.

Test object characteristics (assigned by the client)

Manufacturer's name	Joint-Stock Company " Polymer-Apparat"
Arrester class	Distribution
Designation	DH
MO resistor type	B34/30
Drawing code	PA.VAR.0400.30
Nominal discharge current - [kA]	10,0
Maximum residual voltage at 10 kA - [kV]	14,36
Reference current - I_{ref} [mA]	1,0
Repetitive charge transfer rating – Q_{rs} [C]	0,4
Flat surface area [cm^2]	10,52
Rated frequency - [Hz]	48÷62
Year of manufacture	February 2017

geometrical characteristics measured on MO resistor

Total height [mm]	31,1 mm
Diameter [mm]	36,6 mm

Lic. Abelardo Brugada
Representante Legal
Piro'y S.A.

ACCREDIA
LAB N° 0030

Photograph of the test objects

Photo no. 1

MO resistors type B34/30

Lic. Abelardo Brugada
Representante Legal
Piro'y S.A.

ILAC-MRA ACCREDIA LAB N° 0030

Reference Standard

The test was carried out according to the IEC 60099-4 – Edition 3.0 (2014-06) - Clause 8.3
"Metal-oxide surge arresters without gaps for a.c. system"

Test carried out	Number of sample tested
Lightning impulse residual voltage test	3
Steep current impulse residual voltage test	

Test object identification

Test object name	Identification of test sample (given by CESI)	Lot number and /s/n of the test sample (given by JSC "Polymer Apparat")
MO resistors type B34/30	RV1	702.378b – 36
	RV2	702.378b – 86
	RV3	702.378b – 43

Lic. Abelardo Brugada
Representante Legal
Piro'y S.A.

ACCREDIA
LAB N° 0030

Test procedure

The following tests have been carried out on the same three samples:

a) Lightning impulse residual voltage test
- wave-shape 8/20 µs
- peak current $0{,}5xI_n = 5{,}0$ kA - $I_n = 10{,}0$ kA & $2xI_n = 20{,}0$ kA

b) Steep current impulse residual voltage test
- wave-shape front time equal to 1 µs, tail time less than 20 µs
- peak current $I_n = 10$ kA

- note Correction of the inductive error
The inductive error was determined replacing the surge arrester section with a metal part having the same dimensions and measuring the voltage across the metal part in this condition.
Being the inductive error (peak value) in the range 2% to 20% of the measured residual voltage (peak value) the correction was applied by substracting the impulse voltage shape measured on the surge arrester section and the impulse voltage shape on the metal part.

Test result

Lic. Abelardo Brugada
Representante Legal
Piro'y S.A.

See relevant pages.

ACCREDIA
LAB N° 0030

Residual voltage tests

Lightning impulse residual voltage test.

Test circuit: A0120
Ambient temperature 22°C

Date: September 27, 2017

Sample	Requested current	Charging voltage	Oscillogram	Current waveshape	Discharge current	Residual voltage	Lightning impulse protection level
No.		kV	No.	µs	kA	kV	kV
RV1	$0,5 \times I_n$	18,4	7	8,4/18,4	5,09	13,21	14,32
	I_n	24,2	1	8,5/18,2	10,12	14,32	
	$2,0 \times I_n$	36,0	4	8,5/18,1	20,20	16,00	
RV2	$0,5 \times I_n$	18,4	8	8,4/18,4	5,00	13,21	
	I_n	24,2	2	8,5/18,2	9,99	14,19	
	$2,0 \times I_n$	36,0	5	8,5/18,1	20,14	16,01	
RV3	$0,5 \times I_n$	18,4	9	8,4/18,4	4,97	13,22	
	I_n	24,4	3	8,5/18,2	10,11	14,31	
	$2,0 \times I_n$	36,0	6	8,5/18,1	20,10	16,02	

Notes:

Lic. Abelardo Brugada
Representante Legal
Piro'y S.A

ilac-MRA ACCREDIA LAB N° 0030

A12641G

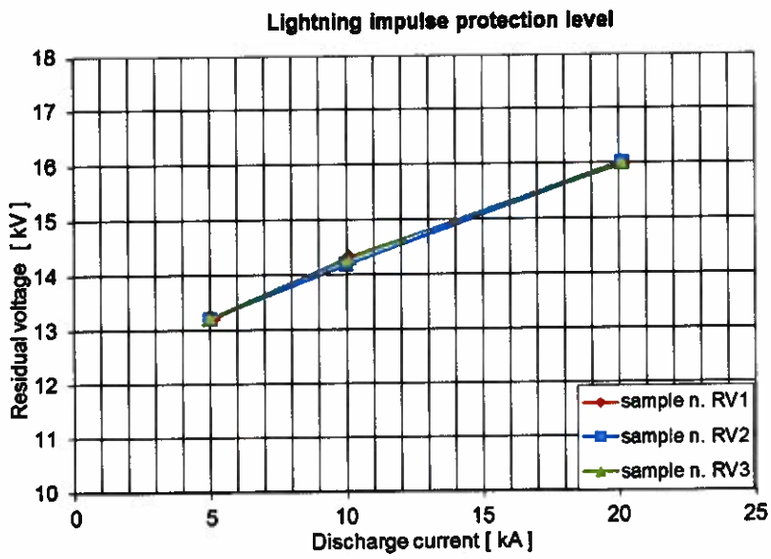

Lic. Abelardo Brugada
Representante Legal
Piro'y S.A.

Residual voltage tests

Steep current impulse residual voltage test.

Measurement of the inductive error

Test circuit: A0121B
Ambient temperature : 23°C

Date: September 28, 2017

Sample	Charging voltage	Oscillogram	Current waveshape	Discharge current	Peak voltage	Inductive error
No.	kV	No.	µs	kA	V	%
aluminium block	33,3	10	1,0/2,2	10,18	270,0	< 2 (1)

Notes: (1) correction is not required

Lic. Abelardo Brugada
Representante Legal
Piro'y S.A.

ACCREDIA
LAB N° 0030

Residual voltage tests

Steep current impulse residual voltage test.

Test circuit: A0121B

Ambient temperature : 23°C
Date: September 28, 2017

Sample	Charging voltage	Oscillogram	Current waveshape	Discharge current	Residual voltage	Steep current impulse protection level
No.	kV	No.	µs	kA	kV	kV
RV1	33,3	11	1,0/2,2	9,95	15,33	15,47
RV2	33,3	12		9,95	15,40	
RV3	33,4	13		9,95	15,47	

Notes:

Lic. Abelardo Brugada
Representante Legal
Piro'y S.A.

ACCREDIA
LAB N° 0030

Circuit A0120

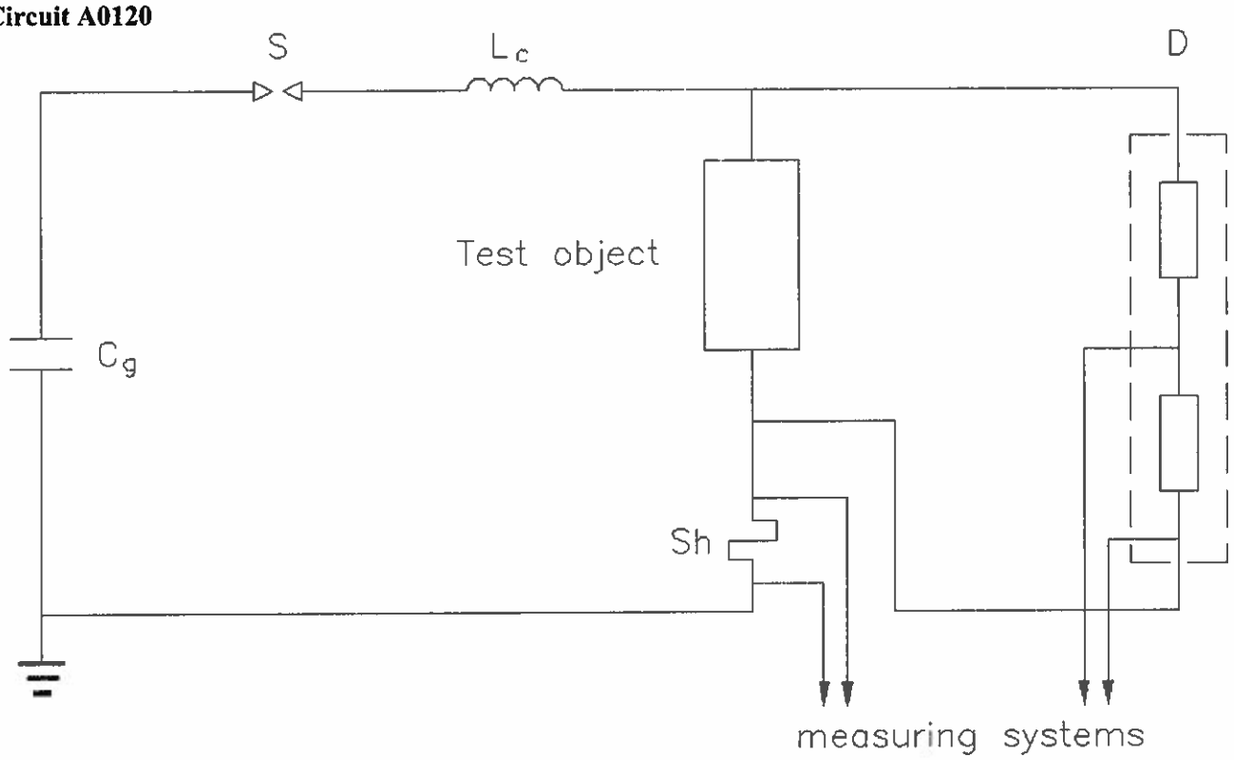

Impulse generator

No. of stages	1
Cg	6,64 µF
Lc	6 µH

S - Spark-gap

For 2xIn a resistor block has been added

Voltage measuring system.

D - Voltage divider SAGI; CESI No.11120
- Electro optical system type HBM CESI No. 57986(Rx) – 57991 (Tx)

OSC
- Oscilloscope type NATIONAL INSTRUMENT NI PXI-1031/NI-PXI 8108/NI-PXI 5122;
- CESI No 056227- 0562226 (on channel No.2)

Current measuring system

Sh - Current shunt CESI No.6042; R= 1,98 mΩ; peak current= 250 kA
- Electro optical system HBM CESI No. 57986(Rx) – 57987 (Tx)

OSC
- Oscilloscope type NATIONAL INSTRUMENT NI PXI-1031/NI-PXI 8108/NI-PXI 5122;
- CESI No 056227- 0562226 (on channel No.1)

SOFTWARE SYSTEM:

SW - S.A.D. Surge arrester version 2.0

Lic. Abelardo Brugada
Representante Legal
Piro'y S.A.

ACCREDIA
LAB N° 0030

Circuit A0121B

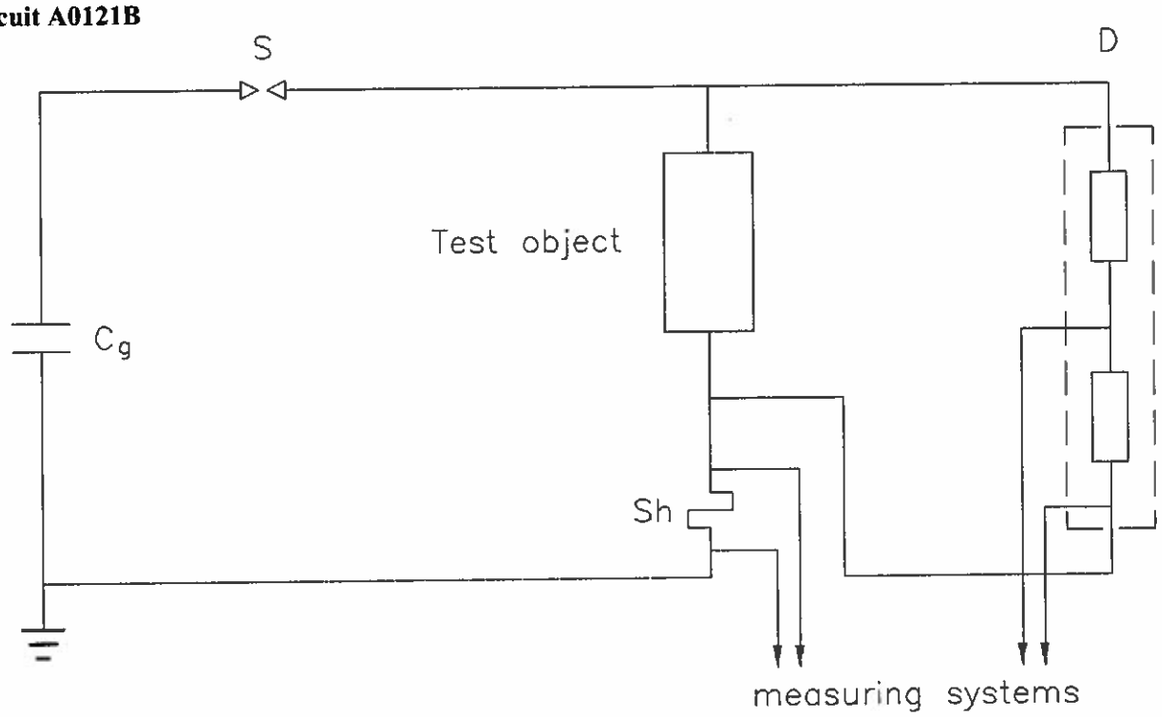

Impulse generator

No. of stages 1
Cg 0,500 µF

S - Spark-gap

Voltage measuring system.

D - Voltage divider SAGI; CESI No.11120
- Electro optical system type HBM CESI No. 57986(Rx) – 57991 (Tx)

OSC - Oscilloscope type NATIONAL INSTRUMENT NI PXI-1031/NI-PXI 8108/NI-PXI 5122;
- CESI No 056227- 0562226 (on channel No.2)

Current measuring system

Sh - Current Pearson CESI No.8252; 0,01 V x A
- Electro optical system HBM CESI No. 57986(Rx) – 57987 (Tx)

OSC - Oscilloscope type NATIONAL INSTRUMENT NI PXI-1031/NI-PXI 8108/NI-PXI 5122;
- CESI No 056227- 0562226 (on channel No.1)

SOFTWARE SYSTEM:

SW - S.A.D. Surge arrester version 2.0

Lic. Abelardo Brugada
Representante Legal
Piro'y S.A.

ACCREDIA
LAB N° 0030

CESI B7019592 Oscillogram n. 1

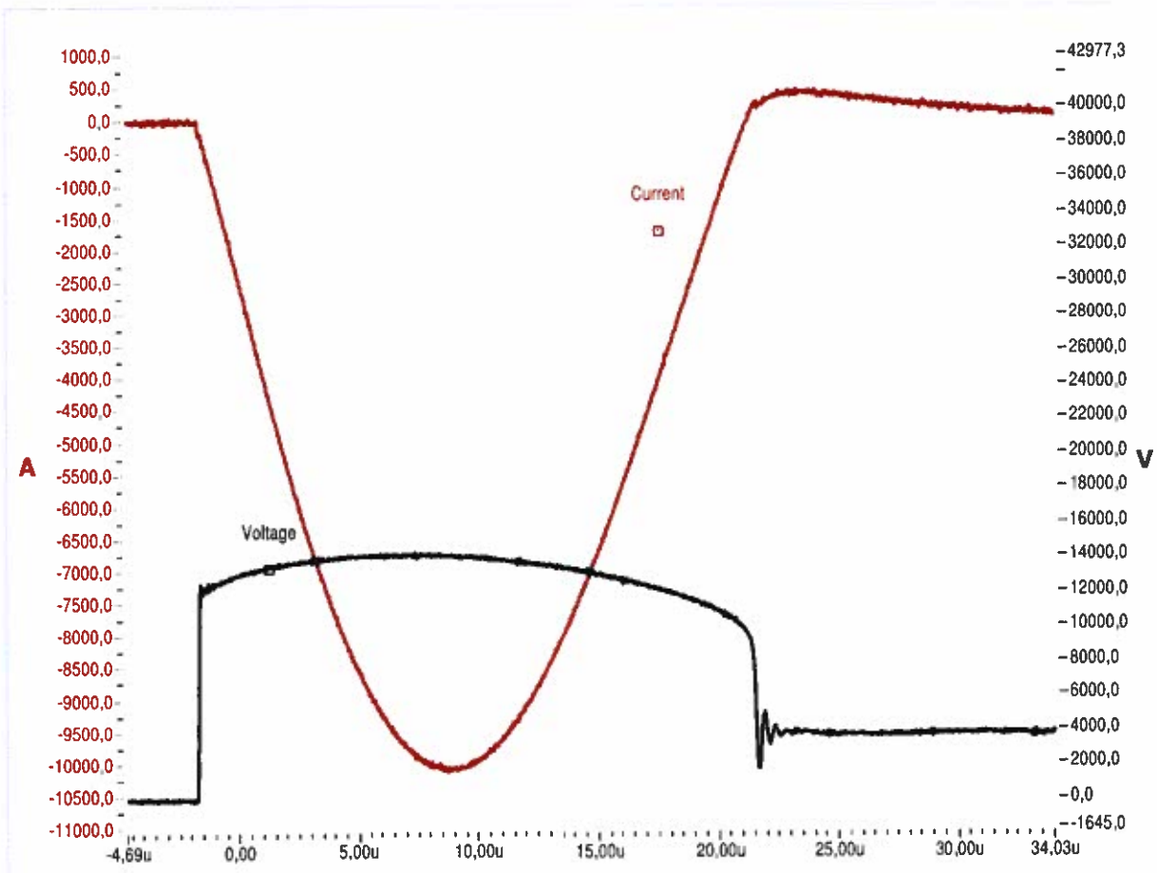

Lic. Abelardo Brugada
Representante Legal
Piro'y S.A.

CESI B7019592 Oscillogram n. 2

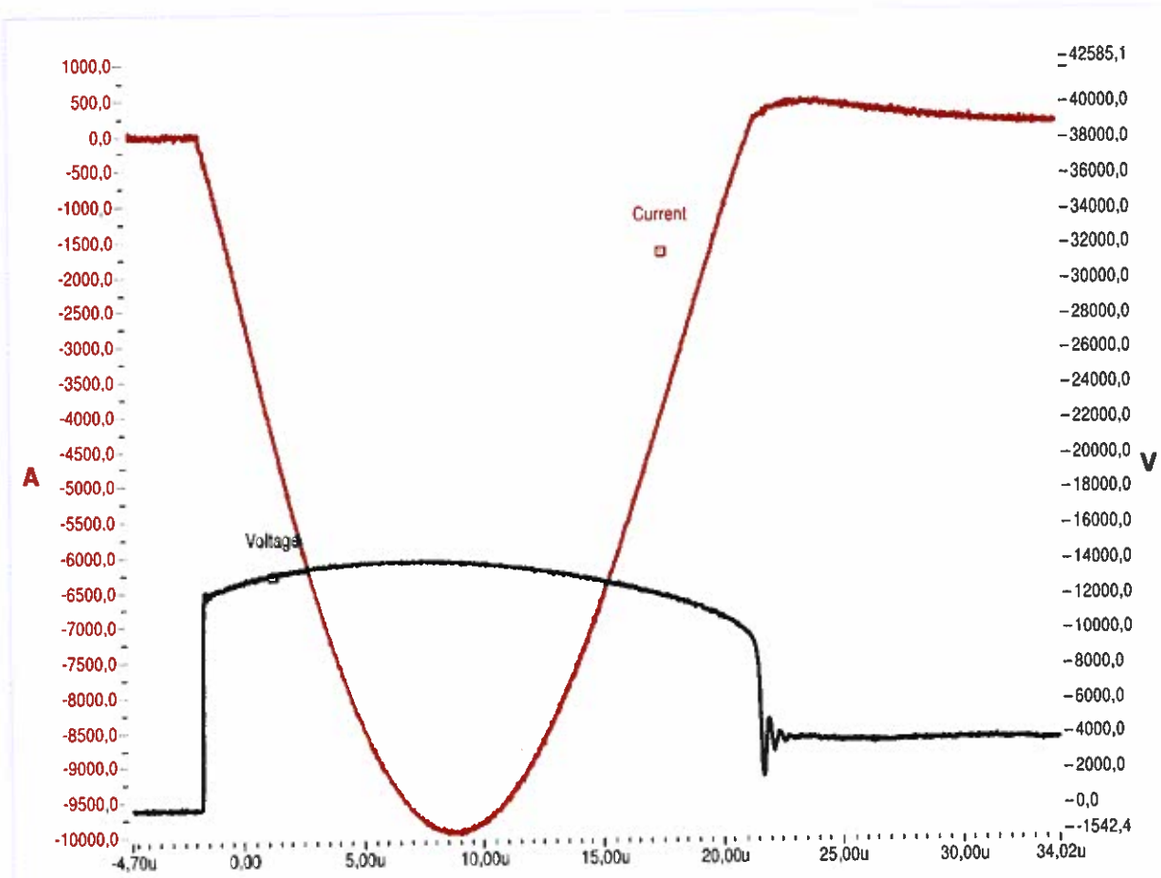

Lic. Abelardo Brugada
Representante Legal
Piro'y S.A.

CESI B7019532 Oscillogram n. 3

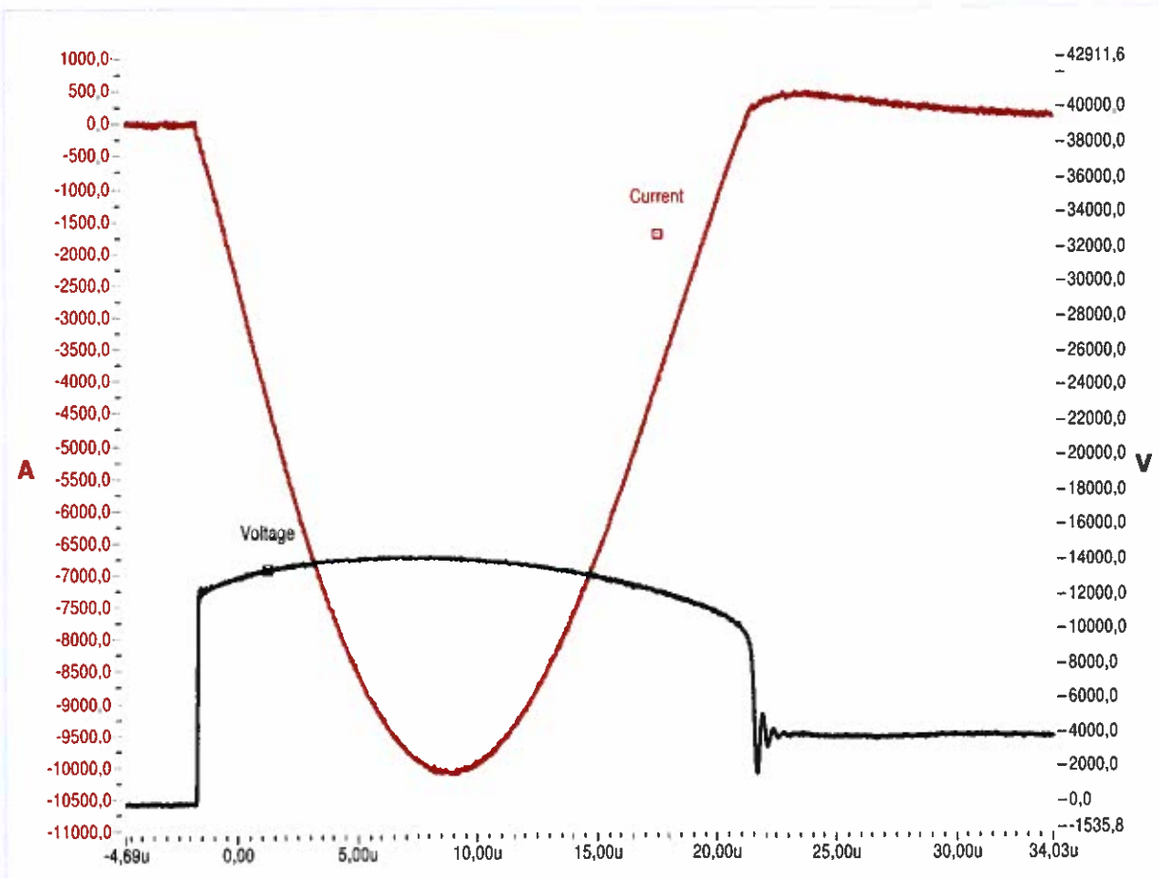

Lic. Abelardo Brugada
Representante Legal
Piro'y S.A.

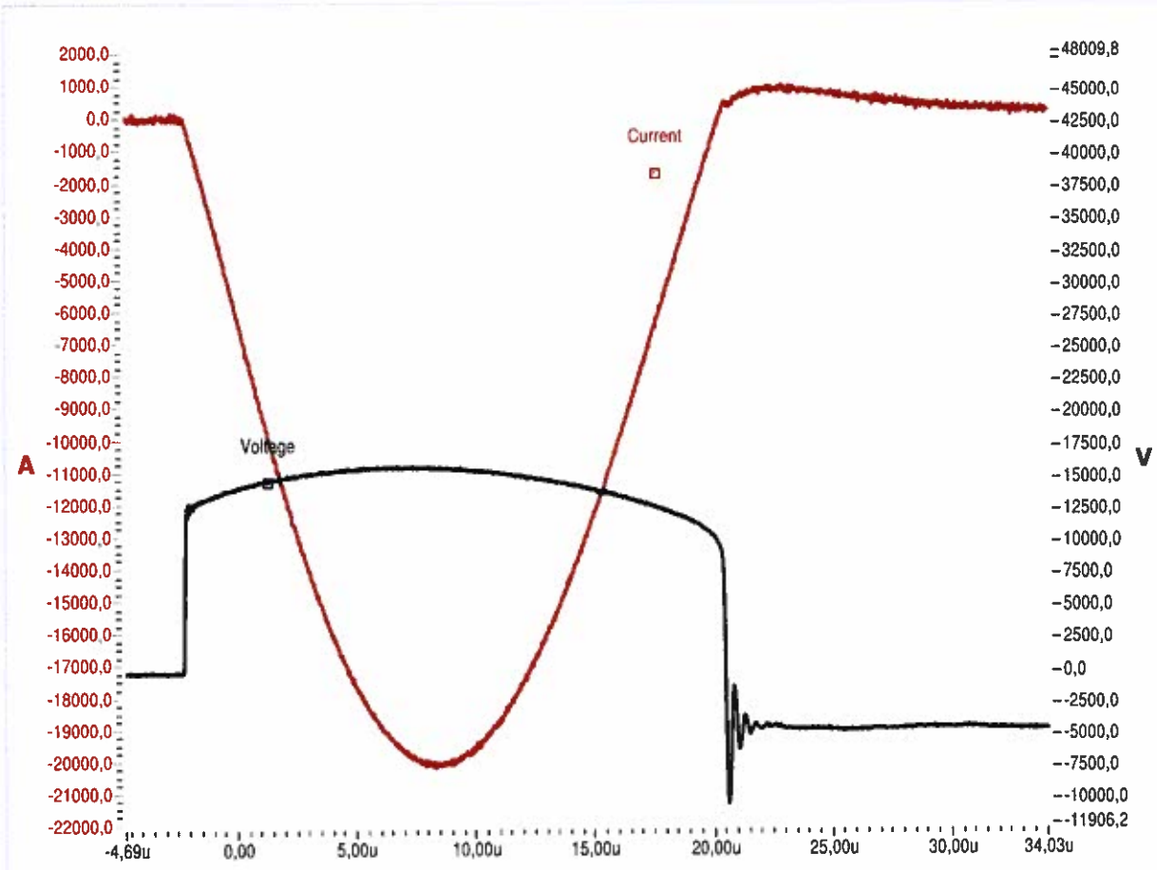

CESI B7019592 Oscillogram n. 4

Lic. Abelardo Brugada
Representante Legal
Piro'y S.A.

CESI B7019592 Oscillogram n. 5

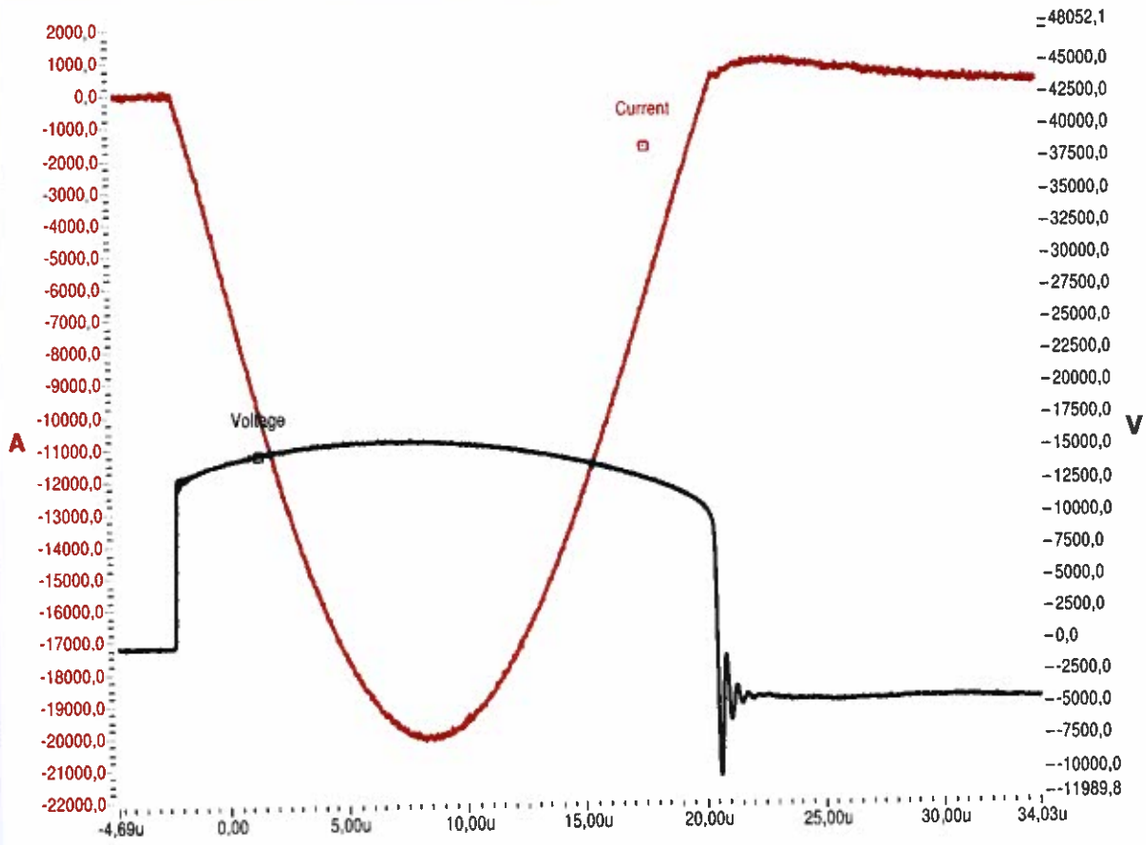

Lic. Abelardo Brugada
Representante Legal
Piro'y S.A.

CESI B7019592 Oscillogram n. 6

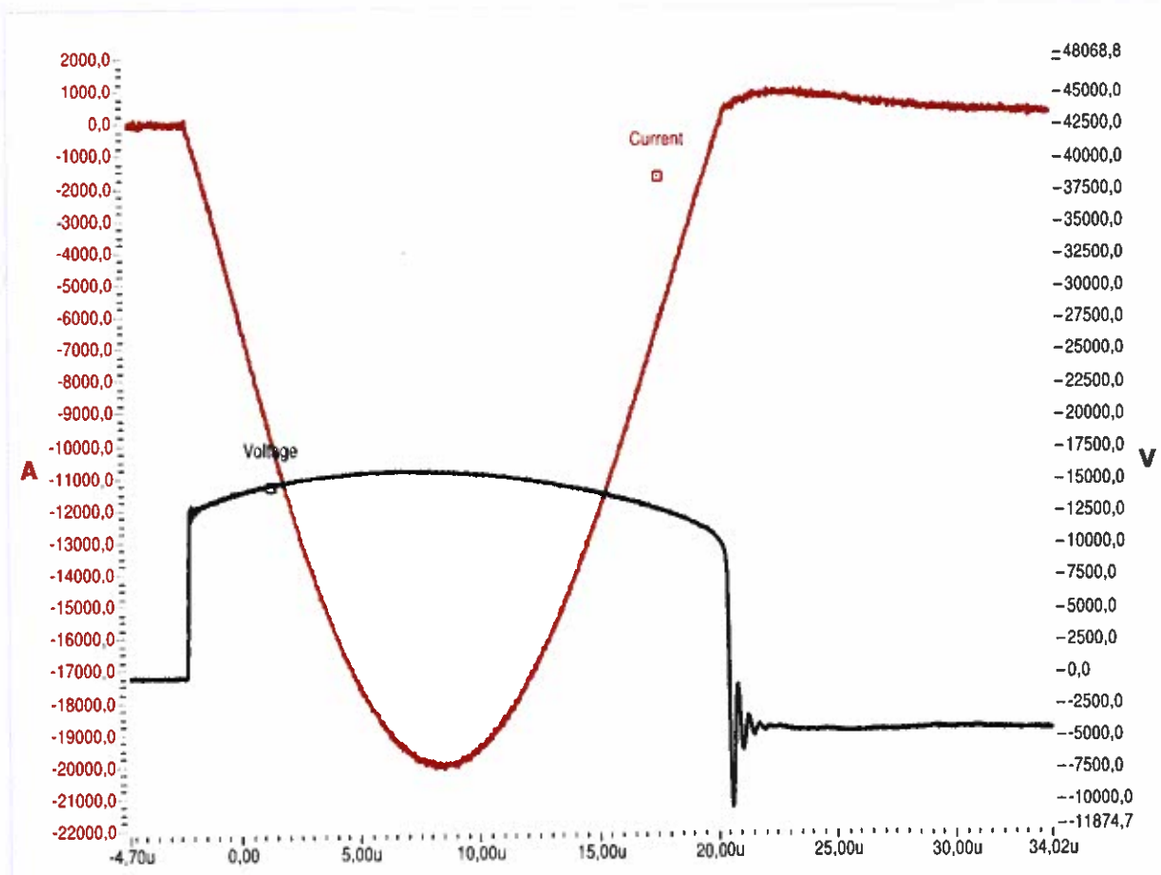

Lic. Abelardo Brugada
Representante Legal
Piro'y S.A.

CESI B7019592 Oscillogram n. 7

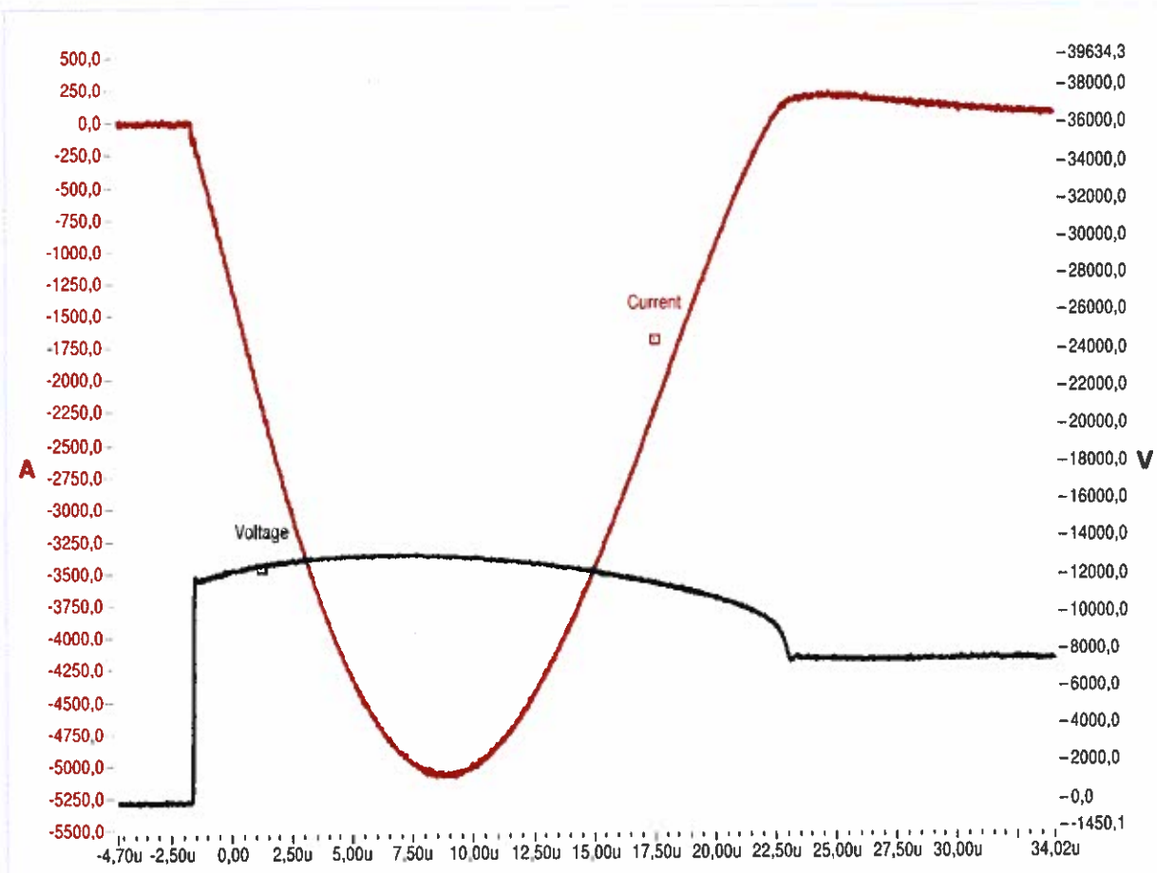

Lic. Abelardo Brugada
Representante Legal
Piro'y S.A.

CESI B7019592 Oscillogram n. 8

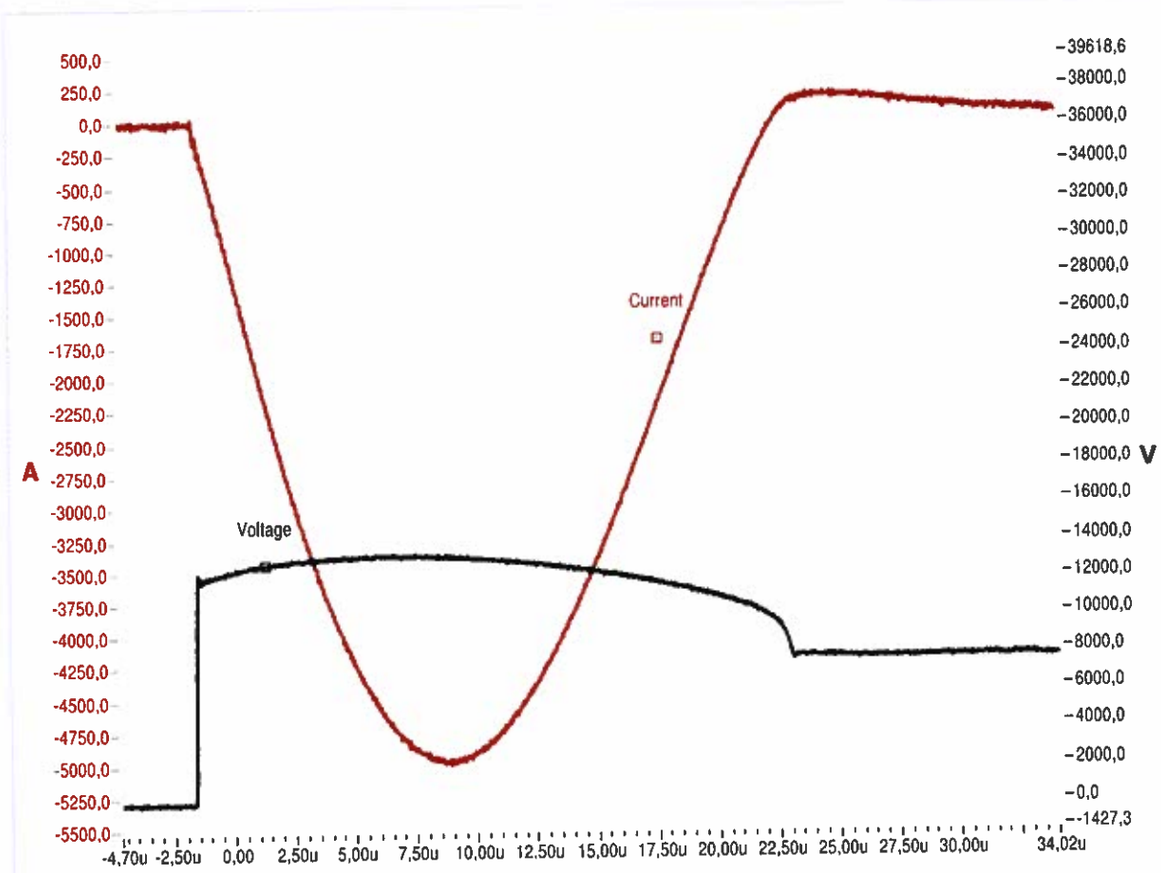

Lic. Abelardo Brugada
Representante Legal
Piro'y S.A.

CESI B7019592 Oscillogram n. 9

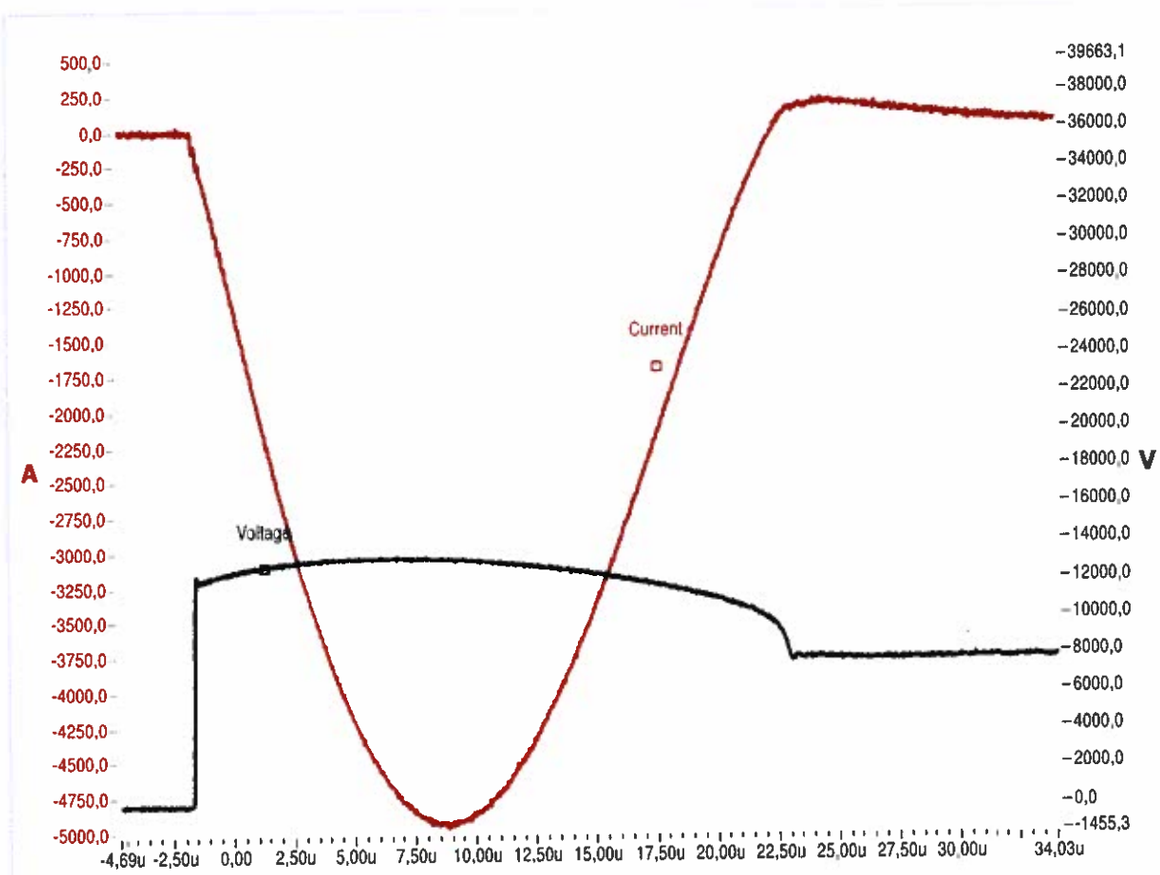

Lic. Abelardo Brugada
Representante Legal
Piro'y S.A.

CESI B7019592 Oscillogram n. 10

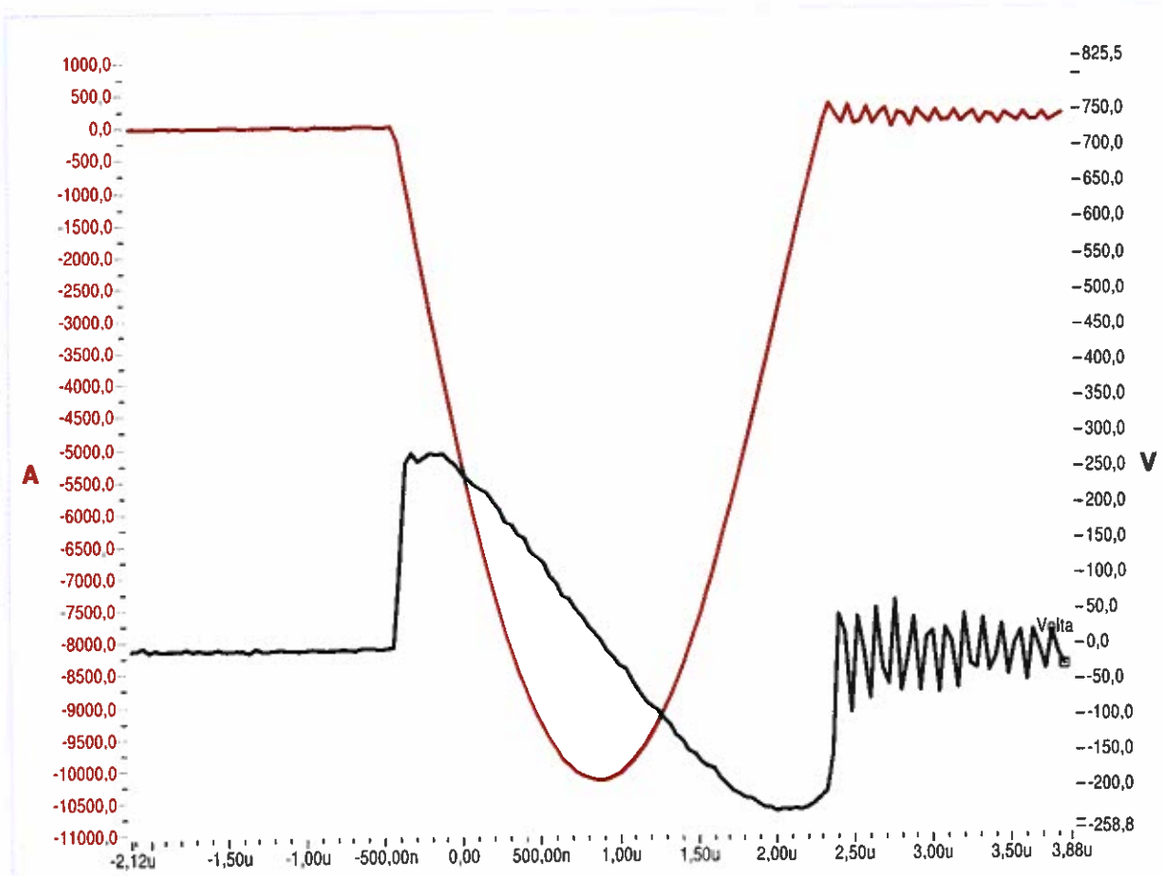

Lic. Abelardo Brugada
Representante Leg
Piro'y S.A

CESI B7019592 Oscillogram n. 11

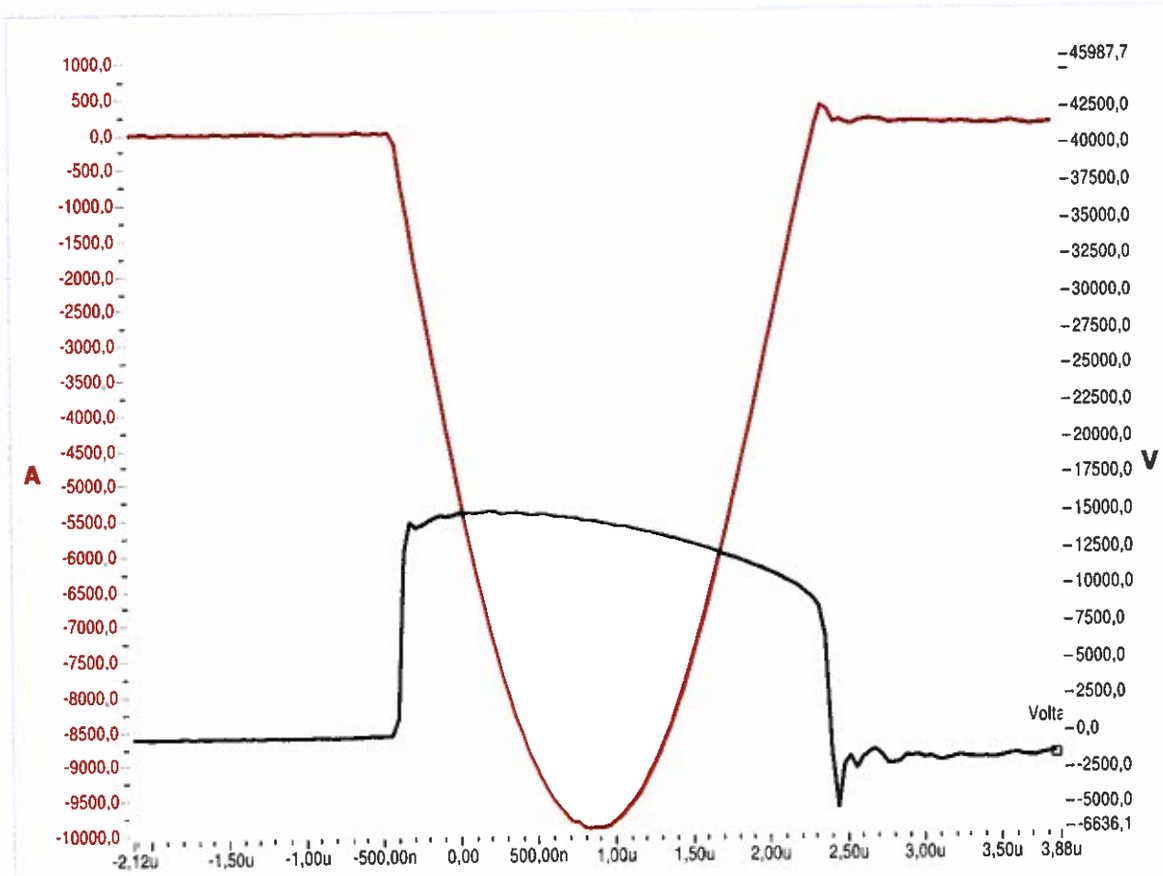

Lic. Abelardo Brugada
Representante Legal
Piro'y S.A.

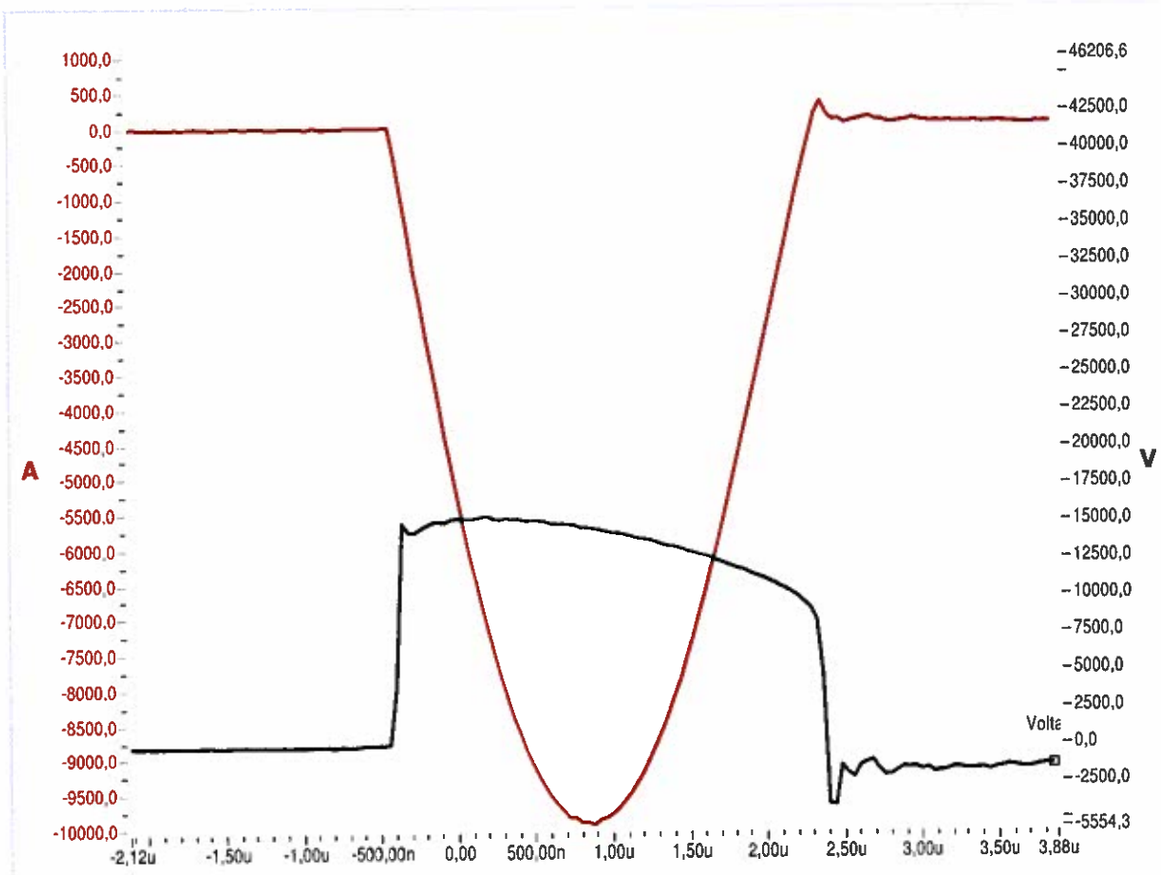

CESI B7019592 Oscillogram n. 12

Lic. Abelardo Brugada
Representante Le
Piro'v S.

CESI B7019592 Oscillogram n. 13

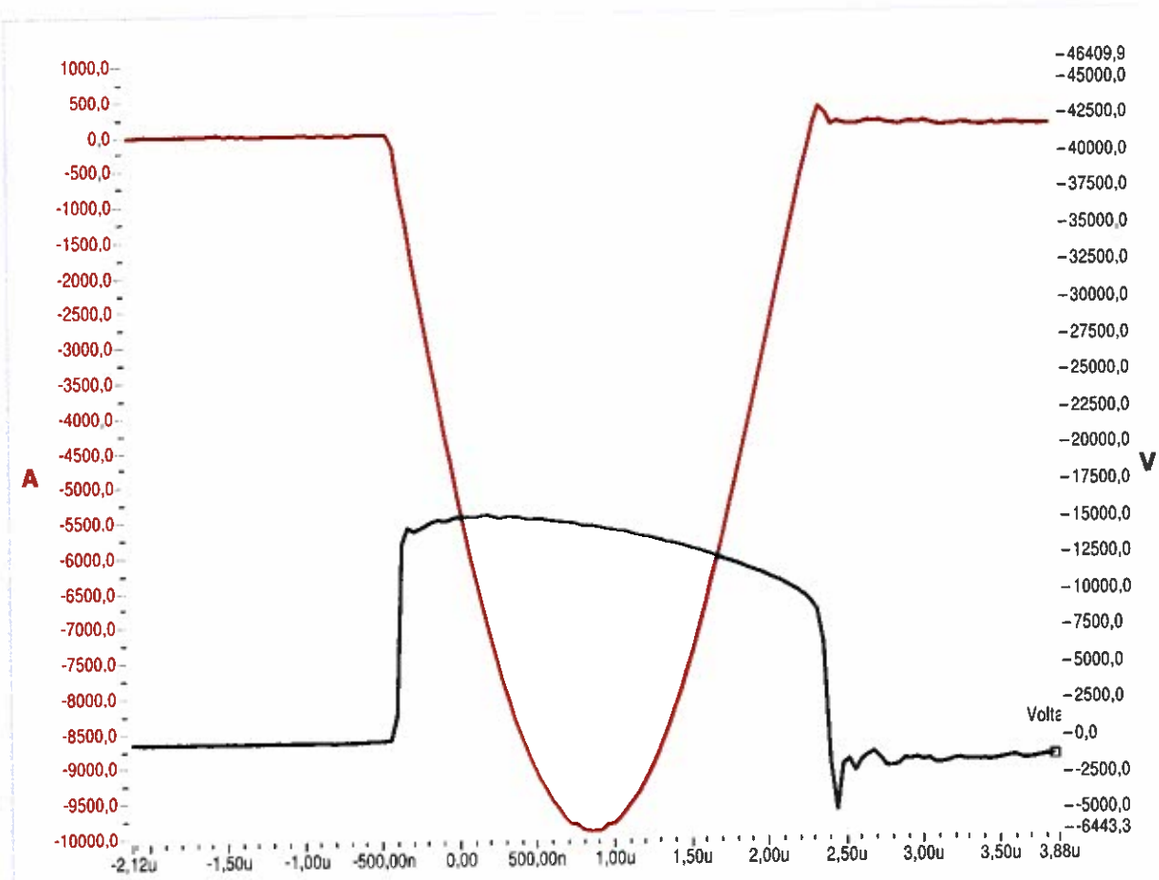

Lic. Abelardo Brugada
Representante Legal
Piro'y S.A.

PA.VAR.0400.30

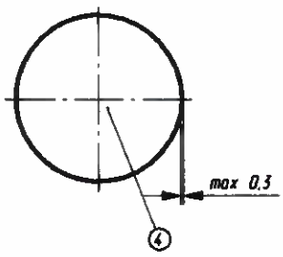

Тип b

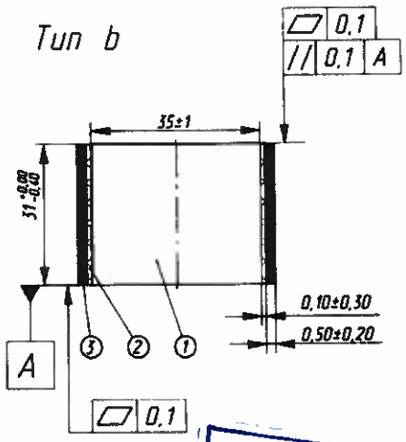

Тип a

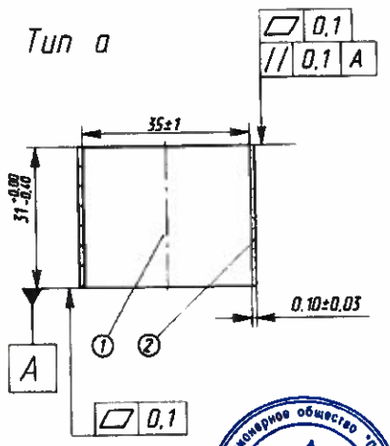

1. Металлооксидный варистор (MOV disk)
2. Изоляционное покрытие стекло (Glass insulating collar)
3. Изоляционное покрытие полиуретан (PU insulating collar)
4. Алюминиевый электрод (Al - electrode)

CESI
B7020307.001

Акционерное общество "Полимер-Аппарат" Санкт-Петербург

Изм.	Лист	N°докум.	Подп.	Дата	PA.VAR.0400.30			
Разраб.		Потапов А.В.		05.17	Varistor B34/30	Лит.	Масса	Масшт.
Пров.		Петухов А.П.		05.17			0.177	1:1
Т.контр.						Лист 1	Листов 1	
Н.контр.					Оксид цинка	ЗАО "Полимер-Аппарат"		
Утв.		Шевцов И.В.		05.17				

Копировал

Формат А4

Подп. и дата | Инв. N° дубл. | Взам. инв. N° | Подп. и дата | Инв. N° подл.

Lic. Abelardo Brugada
Representante Legal
Piro'y S.A.

Test Report

Document No.	B6022563	Copy No.	1	Number of pages	24
Apparatus	Polymeric housing surge arresters				
Designation	PA-DM				
Serial Number	5401-5402-5403-5404				
Manufacturer	JSC "Polymer-Apparat"				
Client	JSC "Polymer-Apparat" 195427, Saint-Petersburg, Ak. Konstantinova Str.,1 - Russia Federation				
Tested for	-				
Date(s) of tests	October 21, 2016				
Tested by	CESI S.p.A. Via Rubattino, 54 20134 Milano – Italy				
Test performed	Short circuit tests				

The apparatus, constructed in accordance with the description, drawings and photographs incorporated in this document has been subjected to the series of proving tests in accordance with:

IEC 60099-4 (2014-06)

The results are shown in the record of proving tests and the oscillograms attached hereto. The general performance is considered as mentioned above. The ratings assigned by the Manufacturer are listed on the ratings page.
The document applies only to the apparatus tested. The responsibility for conformity of any apparatus having the same designations with that tested rests with the Manufacturer.

November 4, 2016

	Ghezzi Giuseppe B6022563 2892 AUT	The Manager - Arcidiaco Lorenzo B6022563 821814 APP
Date	Test Engineer in charge	Approved By Document Digitally Signed

Partial reproduction of this document is permitted only with the written permissions from CESI Group.
The authenticity of this document is guaranteed by the integrity of hologram.

ilac-MRA

ACCREDIA L'ENTE ITALIANO DI ACCREDITAMENTO

LAB N° 0030

The laboratory meets the requirements of the Standard EN ISO/IEC 17025: 2005 "General Requirements for the Competence of Testing and Calibration Laboratories". The in force status of the accreditation and the list of accredited tests may be checked in the WEB site: www.accredia.it

测思 Centro Elettrotecnico Sperimentale Italiano

Lic. Abelardo Brugada
Representante Legal
Piro'y S.A.

CESI

Trust the Power of Experience

PAD B6022563 (2296630) - CONFIDENTIAL USE

Notes

STL-Member

CESI Group members are founder members of the SHORT-CIRCUIT TESTING LIAISON (STL) which has been established in 1969. STL is a forum for voluntary international cooperation of testing organizations.

CESI Group Test Documents description

Type Test Certificate of .....

Issued for type tests of high voltage products (> 1 kV_{ac}; > 1,5 kV_{dc}), which have successfully been carried out in full compliance with the relevant specifications or standards and STL Guides valid at the time of the test. The Type Test Certificate consists of documents unequivocally identifying the test object and describes all conditions under which the tests were conducted. It gives evidence of the unobjectionable behavior of the test object during the tests in line with the normative documents applied as well as of the results of successful testing.

Test Certificate of (complete / selected) Type Tests

Issued if type tests of low voltage products (< 1 kV_{ac}; < 1,5 kV_{dc}) requested by the relevant product standard were passed. For these tests the equipment under test must be clearly identified by technical description, drawings, and additional specifications.

Certificate of Design Verification

Issued for passed design verification tests according to IEC 61439. For these tests the equipment under test must be clearly identified by technical description, drawings, and additional specifications.

Type Test Report

Issued for high and low voltage products if parts of selected type tests have been passed; those shall be carried out in full compliance with the relevant standards but (for high voltage products) do not fulfill all STL requirements for issuing a Type Test Certificate. For these tests the equipment under test must be clearly identified by technical description, drawings, and additional specifications.

Test Report

Issued for all other tests on high and low voltage products which have been carried out according to specifications, standards and/or client instructions

On-Site Test Record

Issued as a record of results acquired during the on-site tests / measurements

Test Award

Can be additionally issued for all named types of test documents above if the tests to be referenced were passed

Lic. Abelardo Brugada
Representante Legal
Piro'y S.A.

Tests witnessed by

Mr. Kolychev Alexandr Joint-Stock Company Polymer-Apparat

Identification of the object Effected.
The Manufacturer guarantees that the tested object is manufactured according to the submitted drawings.
CESI checked that these drawings adequately represent in shape and dimensions the essential details and the parts of the tested object.
These drawing identified by CESI and numbered B6019249 No. 1 are annexed to this document.

Test evaluation
With reference to the Standards/Specifications listed in the first page and the characteristics of the tested sample assigned by manufacturer, the carried out tests passed SUCCESSFULLY

Only for laboratory requirement, in order to reproduce the test conditions, all the laboratory data are contained in the document marked B6021762 and in the following revisions:

Revision No.	Date	Reference

The reported expanded uncertainties are determined in accordance with the Publication JCGM 100 "Evaluation of measurement data - Guide to the expression of uncertainty in measurement" and are based on a standard uncertainty multiplied by a coverage factor k = 2, which for a normal distribution provides a level of confidence of approximately 95 %.

- Voltage a.c. ± 3,0 %
- Current a.c. ± 3,0 %
- Transient Recovery Voltage ± 3,0 %
- Resistance d.c. ± 1,5 %
- Time ± 1,5 %

Receipt date of the sample October 2016

Lic. Abelardo Brugada
Representante Legal
Piro'y S.A.

ACCREDIA
LAB N° 0030

Contents	Page	Test date
Rated characteristics of the tested object assigned by the Client	5	
Test arrangement	6	
Drawing	7	
Tests carried out		
Low-current short-circuit tests *with 610 A for 1,01 s*	8	October 21, 2016
High-current short-circuit tests *with 6,10 kA for 0,21 s*	9	October 21, 2016
High-current short-circuit tests *with 12,1 kA for 0,21 s*	10	October 21, 2016
High-current short-circuit tests *with 20,2 kA for 0,21 s*	11	October 21, 2016
Test circuits	12	
Photos	13 to 17	
Pages annexed		
Oscillograms B6021762 (No. 7 pages)		

Lic. Abelardo Brugada
Representante Legal
Piro'y S.A.

Rated characteristics of the tested object assigned by the Client

Metal-oxide surge arrester	
Manufacturer	Joint-Stock Company Polymer-Apparat
Type	PA-DM
Drawing	
Rated voltage (Ur)	54,0 kV
Maximum continuous operating voltage (Uc)	43,2 kV
Rated frequency	50/60 Hz
Nominal discharge current (8/20 µs impulse shape)	5 kA
Arrester classification	DM
Rated short circuit current	
High current	for 0,20 s ; 20,0 kA
Low current	for 1,00 s ; 0,6 kA

Lic. Abelardo Brugada
Representante Legal
Piro'y S.A.

ILAC-MRA ACCREDIA LABORATORIO DI ACCREDITAMENTO LAB N° 0030

D8058 - Test arrangement

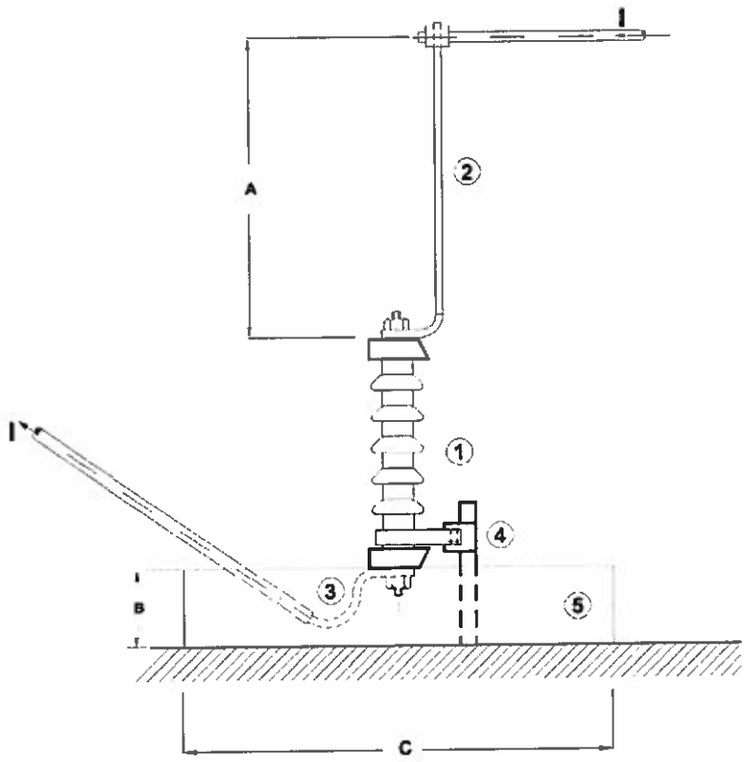

1 : Surge arrester
2 : Flexible conductor
3 : Flexible conductor
4 : Not metallic pole
5 : Enclosure

A : 1,00 m
B : 0,4 m
C : 1,80 m

The arrester to be tested was installed by means of a crossarm on a not metallic pole at 0,4 m to ground in the middle of a square enclosure of 1,80 m in side.
The live side of the supply was connected to the upper end of the arrester while the return circuit, earthed, was connected to the lower end.
The live conductor was directed to the opposite direction as the earth conductor

Lic. Abelardo Brugada
Representante Legal
Piro'y S.A.

ACCREDIA
LAB N° 0030

D12321G

ACCREDIA

LAB N° 0030

CESI

B6015240-001

Lic. Abelardo Brugada
Representante Legal
Piro'y S.A.

D12321G

Low-current short-circuit tests with 610 A for 1,01 s

Test circuit : See D0046 Power factor : <0,15 Frequency : 50 Hz

Prospective test current			
Oscillogram		rms value	Peak value
No.	Sheets	A	kA
2	1	611	1,57

Under test surge arrester PA-DM Type

Test arrangement : See D8058
A photo detector was used to determine the venting time
In order to o achieve the internal discharge the surge arrester has been electrically pre-failed by means of a power frequency over-voltage application using an auxiliary low power source.

The short-circuit current of the auxiliary low power source has been set at about 10 A.
The voltage applied to the arrester was 64,8 kV and kept at this value or slightly adjusted till arrester failure.
The pre-failure process duration was 4 minutes and 10 seconds
The short-circuit test was performed 6 minutes and 05 see after the completion of the pre-failure process.

Condition of the apparatus before the tests: new

Date: October 21, 2016

Test	Oscillogram		Arrester under test	Duration	Test voltage	Test current		Time to flame extinction after the test	Venting time	Notes
						Peak value	rms value			
		Sheets	No.	s	kV	kA	A	s	ms	No.
1	3	1	5401	1,02	35,4	1,10	610	6,00	13,3	-

Condition of the apparatus after the tests:
- there was not violent shattering
- the arrester structure remained intact
- the arrester remained connected to the supply and return circuit
- [illegible]ment were found inside or outside the enclosure
- [illegible]me was extinguished by the operatoor after 6,0 seconds

Acceptance criteria according to clause 8.7.6: Satisfied
Test result: Positive

Lic. Abelardo Brugada
Representante Legal
Piro'y S.A.

D12321G

High-current short-circuit tests with 6,10 kA for 0,21 s

Test circuit : See D0046 Power factor : <0,15 Frequency : 50 Hz

Prospective test current			
Oscillogram		rms value	Peak value
No.	Sheets	kA	kA
4	1	6,17	16,1

Under test surge arrester PA-DM Type

Test arrangement : See D8058
A photo detector was used to determine the venting time
In order to o achieve the internal discharge the surge arrester has been electrically pre-failed by means of a power frequency over-voltage application using an auxiliary low power source.

The short-circuit current of the auxiliary low power source has been set at about 10 A.
The voltage applied to the arrester was 63,3 kV and kept at this value or slightly adjusted till arrester failure.
The pre-failure process duration was 4 minutes and 40 seconds
The short-circuit test was performed 5 minutes and 25 sec after the completion of the pre-failure process.

Condition of the apparatus before the tests: new

Date: October 21, 2016

Test	Oscillogram		Arrester under test	Duration	Test voltage	Test current		Time to flame extinction after the test	Venting time	Notes
						Peak value	rms value			
		Sheets	No.	s	kV	kA	kA	s	ms	No.
2	5	1	5402	0,21	35,4	12,3	6,10	-	6,0	-

Condition of the apparatus after the tests:
- there was not violent shattering
- the arrester structure remained intact
- the arrester remained connected to the supply and return circuit
- no fragment were found inside or outside the enclosure
- no flame was noted

Acceptance criteria according to clause 8.7.6: Satisfied
Test result: Positive

Lic. Abelardo Brugada
Representante Legal
Piro y S.A.

D12321G

High-current short-circuit tests with 12,1 kA for 0,21 s

Test circuit : See D0046 Power factor : <0,15 Frequency : 50 Hz

Prospective test current			
Oscillogram		rms value	Peak value
No.	Sheets	kA	kA
-	-	-	-

Under test surge arrester PA-DM Type

Test arrangement : See D8058
A photo detector was used to determine the venting time
In order to o achieve the internal discharge the surge arrester has been electrically pre-failed by means of a power frequency over-voltage application using an auxiliary low power source.

The short-circuit current of the auxiliary low power source has been set at about 10 A.
The voltage applied to the arrester was 63,4 kV and kept at this value or slightly adjusted till arrester failure.
The pre-failure process duration was 4 minutes and 15 seconds
The short-circuit test was performed 6 minutes and 30 sec after the completion of the pre-failure process.

Condition of the apparatus before the tests: new

Date: October 21, 2016

Test	Oscillogram		Arrester under test	Duration	Test voltage	Test current		Time to flame extinction after the test	Venting time	Notes
						Peak value	rms value			
		Sheets	No.	s	kV	kA	kA	s	ms	No.
3	6	1	5403	0,21	35,4	26,8	12,1	-	6,30	-

Condition of the apparatus after the tests:
- there was not violent shattering
- the arrester structure remained intact
- the arrester remained connected to the supply and return circuit
- no fragment were found inside or outside the enclosure
- [illegible]me was noted

[illegible]ptance criteria according to clause 8.7.6: Satisfied
Test result: Positive

Lic. Abelardo Brugada
Representante Legal
Piro'y S.A

High-current short-circuit tests with 20,2 kA for 0,21 s

Test circuit : See D0046 Power factor : <0,15 Frequency : 50 Hz

Prospective test current			
Oscillogram		rms value	Peak value
No.	Sheets	kA	kA
7	1	20,7	52,3

Under test Surge arrester PA-DM Type

Test arrangement : See D8058
A photo detector was used to determine the venting time
In order to o achieve the internal discharge the surge arrester has been electrically pre-failed by means of a power frequency over-voltage application using an auxiliary low power source.

The short-circuit current of the auxiliary low power source has been set at about 10 A.
The voltage applied to the arrester was 63,0 kV and kept at this value or slightly adjusted till arrester failure.
The pre-failure process duration was 3 minutes and 55 seconds
The short-circuit test was performed 5 minutes and 10 sec after the completion of the pre-failure process.

Condition of the apparatus before the tests: new

Date: October 21, 2016

Test	Oscillogram		Arrester under test	Duration	Test voltage	Test current		Time to flame extinction after the test	Venting time	Notes
						Peak value	rms value			
		Sheets	No.	s	kV	kA	kA	s	ms	No.
4	8	1	5404	0,21	35,4	45,5	20,2	-	4,6	-

Condition of the apparatus after the tests:
- there was not violent shattering
- the arrester structure remained intact, only polymer housing slided down
- the arrester remained connected to the supply and return circuit
- fragment were found outside the enclosure
- flame was noted

Acceptance criteria according to clause 8.7.6: Satisfied
Test result: Positive

Lic. Abelardo Brugada
Representante Legal
Piro'y S.A.

Test circuit D0046

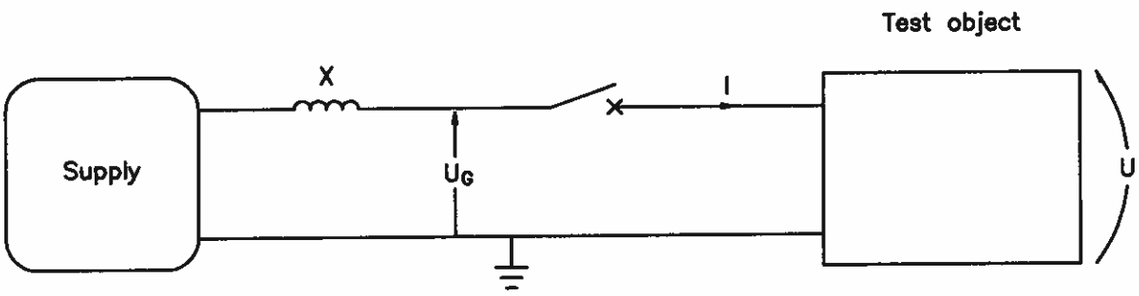

Symbols used in this diagram are the same as those on the oscillograms.

Lic. Abelardo Brugada
Representante Legal
Piro'y S.A.

ilac-MRA ACCREDIA LAB N° 0030

TEST CENTER OF HIGH-VOLTAGE EQUIPMENT
(ITSVA)
JSC "NIIVA"

Accreditation Certificate No. ROSS RU.0001.21 MB01
from January 23, 2006 to January 23, 2009
Address: 199106, Russia, St. Petersburg
V.O., 24 line, 15/2

DISCONNECTOR FOR SURGE ARRESTERS
OPNp series, voltage classes 35-500 Kv

TEST REPORT No. PI-7009
Impulse current and working cycle test

Lic. Abelardo Brugada
Representante Legal
Piro'y S.A

Head of LKI I.M. Nikonova

Test object:	Disconnector for surge arrester
Manufacturer:	JSC «Polymer-Apparat", St. Petersburg
Category of test	Research-development test
Type of test:	Breaking capacity test
Date of receipt of samples:	September 2007 г
Test time:	November 2007 г
Conclusion:	The disconnectors of surge arresters of the OPNp series, manufactured by POLYMER-APPARAT, meet the requirements of TU 3414-003-15207362-2003 and TU 3414-015-15207362-2007

Tests conducted:
Senior Researcher G.E. Agafonov

Lic. Abelardo Bruga
Representante Legal
Piro'y S.A.

1 Characteristics and nominal data of the test object

1.1 The disconnectors used by JSC POLYMER-APPARAT to complete the surge arresters of the OPNp series manufactured in accordance with the technical specifications TU 3414-003-15207362-2003 and TU 3414-015-15207362-2007 were presented for testing. The tests were carried out in order to confirm the operability and determine the time of operation of the separators under the influence of currents of different values.

1.2 Nominal parameters

- mains voltage class, kV 35-500
- affecting currents, A 50-800

2 Program and test methods

2.1 Requirements and test methods are given in Table 1.

Table 1

GOST, technical specification	Item number	
	Technical requirements	Test methods
TU 3414-003-15207362-2003	1.2.2	4.19
TU 3414-015-15207362-2007	1.2.2	4.19

2.2 The tests were carried out in a single-phase circuit according to the scheme shown in Figure 1.

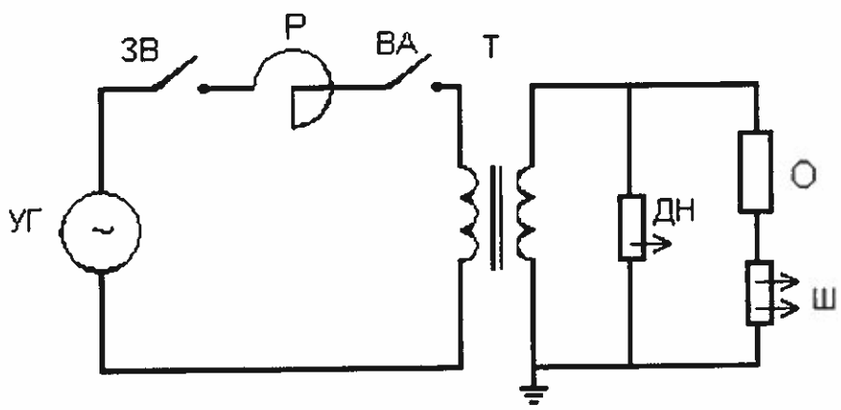

UG - shock generator
VA - powering device
ZV - the safety switch
P - reactor
T - power transformer
DN - voltage divider
O - separator
Ш - measuring shunt

Figure 1 - Test Scheme

Lic. Abe
Repres
Pro

3 Test conditions

The test separators were installed in an open test chamber and fastened in accordance with the installation instructions.

4 Testing equipment and measuring instruments

The list of applied test facilities is given in Appendix A.

5 Test Results

5.1 The test results are shown in Table 2.

Table 2

№ осц.	Current effective value, A	Actuation time of disconnector, ms	Disconnexion time,c	Test results
16441	205	5	0,82	Switched off
16442	200	8	0,70	«- »
16443	200	6	0,75	«- »
16444	810	2	0,60	«- »
16445	815	1	0,74	«- »
16446	805	2	0,71	«- »
16447	49	8	0.60	«- »
16448	51	7	0,52	«- »
16449	52	8	0,72	«- »

Lic. Abelardo Brugada
Representante Legal
Piro'y S.A.

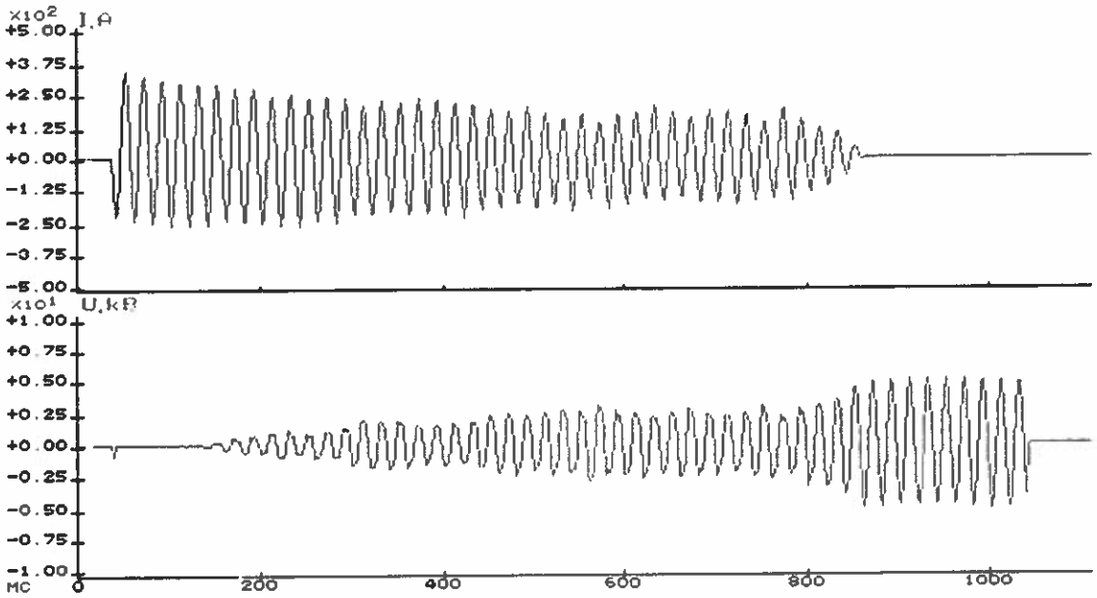

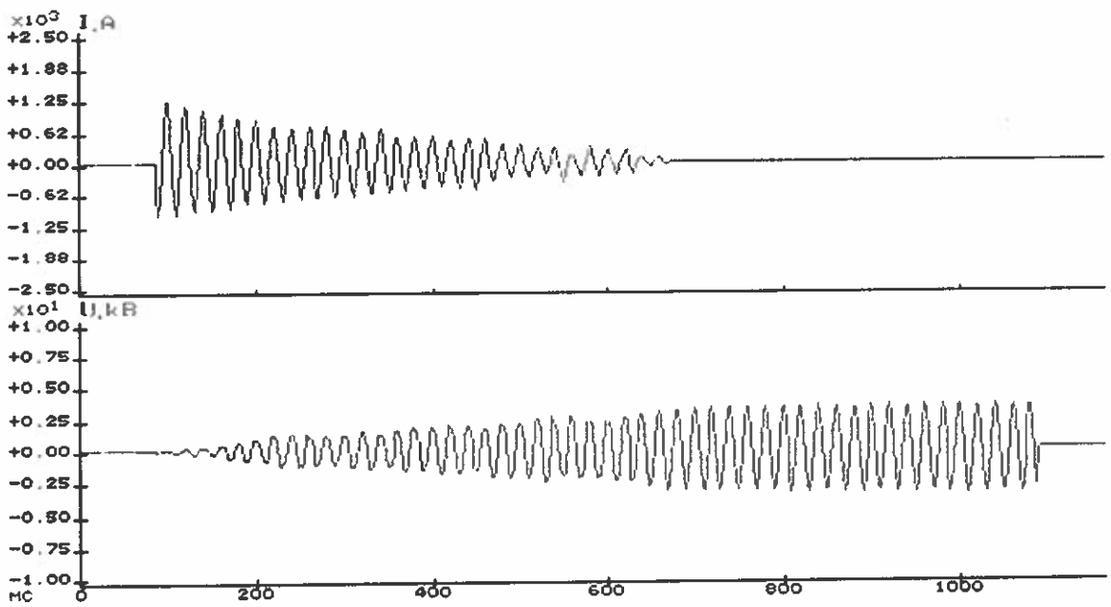

Lic. Abelardo Brugao
Representante Legal
Piro'y S.A.

осц №16444

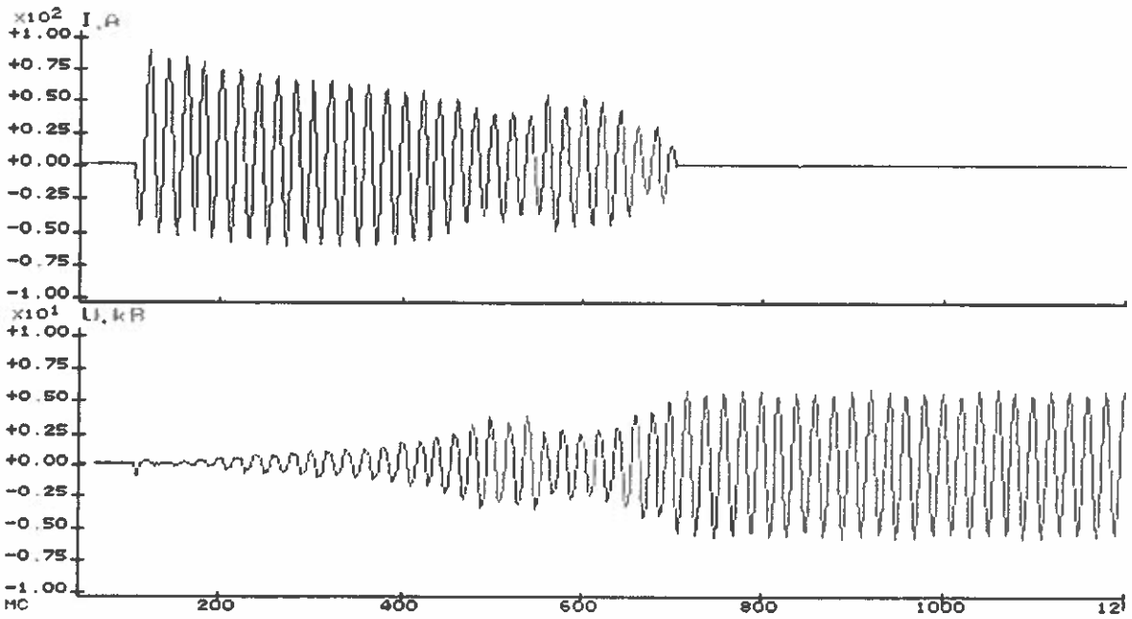

осц №16447

Lic. Abelardo Brugada
Representante Legal
Piro'y S.A

Appendix A

(mandatory)

List of test tools

Test tools	Accuracy class, accuracy, division price	Parameters of the wall d (installation), measurement of SI	Зав.№ Инв.№	№ certificate, their validity
Three Phase Test Bench	ПГ ±5,0 %	£/=(3-40) кВ /=(0,04-450) кА	1700	Certificate № 74-03 of 01.03.03 till 01.03.08
Automated system of automated process control system "Aramis"	ПГ ±2,5 %	8 instrument channel	034316	Certificate №0061547 of 31.05.06 till 31.05.08
Voltage divider DN-35 / 100U2	ПГ ±1,5 %	(0-35) кВ	4,5,6	Certificate № 2202-6/23 of 25.04.06 till 01.05.08
Shunt SHIP-0,1	ПГ±1 %	(0-7) кА	-	Certificate № 239-05 от 07.12.05 до 07.12.07

Lic. Abelardo Brugada
Representante Legal
Piro'y S.A.