AMERICAN NATIONAL STANDAR

American National Standard

ANSI C29.7-1996

AMERICAN NATIONAL STANDARD FOR WET-PROCESS— PORCELAIN INSULATORS— HIGH-VOLTAGE LINE-POST TYPE

NEMA
NATIONAL ELECTRICAL MANUFACTURERS ASSOCIATION
1300 NORTH 17TH STREET, SUITE 1847, ROSSLYN, VA 22209
(703) 841-3200 FAX: (703) 841-3300

ANSI® C29.7-1996

American National Standard for Wet-Process—Porcelain Insulators—High-Voltage Line-Post Type

National Electrical Manufacturers Association

Approved July 16, 1996

American National Standards Institute

© Copyright 1997 by the National Electrical Manufacturers Association. All rights including translation into other languages, reserved under the Universal Copyright Convention, the Berne Convention or the Protection of Literary and Artistic Works, and the International and Pan American Copyright Conventions.

American National Standard

An American National Standard implies a consensus of those substantially concerned with its scope and provisions. An American National Standard is intended as a guide to aid the manufacturer, the consumer, and the general public. The existence of an American National Standard does not in any respect preclude anyone, whether he has approved the standard or not, from manufacturing, marketing, purchasing, or using products, processes, or procedures not conforming to the standard. American National Standards are subject to periodic review and users are cautioned to obtain the latest editions.

The American National Standards Institute does not develop standards and will in no circumstances give an interpretation of any American National Standard. Moreover, no person shall have the right or authority to issue an interpretation of an American National Standard in the name of the American National Standards Institute.

CAUTION NOTICE: This American National Standard may be revised or withdrawn at any time. The procedures of the American National Standards Institute require that action be taken to reaffirm, revise, or withdraw this standard no later than five years from the date of approval. Purchasers of American National Standards may receive current information on all standard by calling or writing the American National Standards Institute.

Published by

National Electrical Manufacturer Association
1300 North 17th, Street, Suite 1847, Rosslyn, VA 22209

No part of this publication may be reproduced in any form, in an electronic retrieval system or otherwise, without the prior written permission of the publisher.

Printed in the United States of America

Contents

page

Foreword ii

1 Scope 1
2 Normative references 1
3 Definitions 1
4 General 1
5 Material 1
6 Dimension and characteristics 1
7 Marking 2
8 Sampling, inspection, and tests 3

Annex

A Packaging 15

Tables

1 Dimension and characteristics of line post insulators 3
2 Neck designations and dimensions 4

Figures

1 Classes 57-1, 57-2, and 57-3 6
2 Classes 57-4, 57-5, and 57-6 7
3 Classes 57-11, 57-12, 57-13, 57-14, 57-15, and 57-16 8
4 Classes 57-21, 57-22, 57-23, 57-24, 57-25, and 57-26 9
5 Classes 57-31, 57-32, 57-3, 57-34, 57-35, 57-36 9
6 Cap dimensions–Vertical clamp 10
7 Cap dimensions–Horizontal clamp 11
8 Cap gauge 12
9 Base recess and thread dimensions 13
10 Gain base details 14

Foreword (This Foreword is not a part of American National Standard C29.7-1996)

This standard is periodically reviewed for any revisions necessary to keep it current with advancing technology. Suggestions for improvement of this standard will be welcome. They should be sent to: Vice President, Engineering, National Electrical Manufacturers Association, 1300 North 17th Street, Suite 1847, Rosslyn, VA 22209.

This standard was processed and approved for submittal to ANSI by ASC C29. Committee approval of the standard does not necessarily imply that all committee members voted for approval. At the time ANSI approved this standard, the ASC C29 Committee had the following members:

R. Harmon, Chair
C. Merther, Secretary

Organization Represented	*Name of Representative*
Bonneville Power Administration	R. L. Brown
Electric Light and Power Group	A. S. Jagtiani J. Burnham W. A. Kosakowski D. Shead
Institute of Electronic and Electrical Engineers	T. A. Pinkham J. Cartwright H. Schneider R. Harmon
National Electrical Manufacturers Association	A. Schwalm A. Bernstorf T. Grisham J. Josephson N. Kharas J. Lapp F. Richens R. Stanley G. Stewart J. Yu
U.S. Department of the Army	J. A. Gilson, Jr.
Individual Member	G. Amburgey J. S. Buchanan S. A. Davidson F. B. Callahan

American National Standard for Wet-Process--- Porcelain Insulators-- High-Voltage Line-Post Type

1 Scope

This standard covers high-voltage line-post-type insulators made of wet-process porcelain and used in the transmission and distribution of electrical energy.

2 Normative references

When the following American National Standards referred to in this document are superseded by a revision approved by the American National Standards Institute, Inc. the revision shall apply:

ANSI C29.1-1988, *Test Methods of Electrical Power Insulators*

ANSI Z55.1-1967(R1973), *American National Standard Gray Finishes for Industrial Apparatus and Equipment*

ASTM A153-82, *Specification for Zinc Coating (Hot Dip) on Iron and Steel Hardware*

3 Definitions

3.1 See clause 2 of ANSI C29.1, for definitions of terms.

3.2 As used in the title and elsewhere in this standard, the term "insulator" or "insulators" shall mean any of the assemblies shown, whether they consist of a single piece of porcelain together with its metal parts or of two of more such porcelains bolted together to form a rigid assembly.

As used in this standard, the term "unit," "units," "insulator unit," or "insulator units" shall mean any single-piece porcelain assembly together with its metal parts.

4 General

4.1 Insulators shall conform in all respects to the requirements of this standard. The text and figures supplement each other and shall be considered part of this standard.

4.2 Manufacturer's drawings, if furnished, shall show the outline of the insulators together with all pertinent dimensions. Any variations in these dimensions due to manufacturing tolerances shall be indicated.

5 Material

5.1 The insulators shall be made of good commercial-grade wet-process porcelain.

5.2 The entire porcelain surface of the insulator, with the exception of a firing surface, shall be glazed. The entire surface shall be relatively free from imperfections.

Color is not a part of this standard. If gray is required, it shall be in accordance with ANSI Z55 and conform to Munsell notation 5BG 7.0/0.4 with the following tolerances:

1) Hue: ±12(3G to 7B)

2) Value: ± 0.5

3) Chroma: - 0.2 to + 0.6

6.3 Metal parts shall be made of a good commercial grade of malleable iron, ductile iron, steel, or aluminum. Ferrous parts, other than stainless steel, shall be galvanized in accordance with ASTM A153.

6 Dimensions and characteristics

6.1 Figures 1 through 5 are type drawings. Dimensions and characteristics of the insulator shall be in accordance with these figures and table 1.

6.2 When specified, neck designations and dimensions shall be as shown in table 2.

7 Marking

Each insulator shall bear symbols identifying the manufacturer and giving the year of manufacture. The marking shall be legible and durable.

8 Sampling, inspection, and tests

8.1 General

Tests described in 8.2 shall be required only on insulators of new designs. Tests described in 8.3 shall be required on each lot of insulators. Tests described in 8.4 shall be made on each insulator.

8.2 Design tests

8.2.1 Low-frequency dry flashover test

Three insulators shall be selected at random and tested in accordance with 4.2 of ANSI C29.1. Failure of the average dry flashover value of the three insulators to equal or exceed 95% of the rated dry flashover value, as given in table 1, shall constitute failure to meet the requirements of this standard.

8.2.2 Low-frequency wet flashover test

Three insulators shall be selected at random and tested in accordance with 4.3 of ANSI C29.1. Failure of the average wet flashover value of the three insulators to equal or exceed 90% of the rated wet flashover value, as given in table 1, shall constitute failure to meet the requirements of this standard.

8.2.3 Critical impulse flashover tests-positive

Three insulators shall be selected at random for the critical impulse flashover test, positive, and tested in accordance with 4.7 of ANSI C29.1. Failure of the average critical impulse flashover value of the three insulators to equal or exceed 92% of the rated critical impulse flashover value, as given in table 1, shall constitute failure to meet the requirements of this standard.

8.2.4 Radio-influence voltage test

Three insulators shall be selected at random and tested in accordance with 4.9 of ANSI C29.1. If one or more insulators fail to meet the requirements given in table 1, three additional insulators shall be selected at random and tested. Failure of one or more of these additional insulators shall constitute failure to meet the requirements of this standard.

Table 1--Dimensions and characteristics of line post insulators

Class	Low frequency flashover		Positive critical impulse flashover	Radio influence voltage		Leakage distance	Dry arcing distance	Reference height/length	Cantilever strength	Nominal diameter insulating part	Center hole nominal threaded size	Figure
	Dry kV	Wet kV	kV	Test voltage[1] kV	Max RIV[2] microvolts	Inches	Inches	Inches	Pounds	Inches	Inches	
Vertical tie-top type												
57-1	70	50	120	15	100	14	6.5	9	2800	5.5	3/4	1
57-2	100	70	160	22	100	22	9.5	12	2800	6	3/4	1
57-3	125	95	200	30	200	29	12.25	15	2800	6.5	3/4	1
57-4	140	110	230	44	200	40	14.5	17	2800	7	3/4	2
57-5	160	130	265	44	200	45	17.25	20	2800	7.5	3/4	2
57-6	180	150	300	44	200	53	19.25	23.5	2800	8	7/8	2
Vertical clamp-top type												
57-11	70	50	120	15	100	14	6.5	10	2800	6	3/4	3
57-12	100	70	160	22	100	22	9.5	13	2800	6.5	3/4	3
57-13	125	95	200	30	200	29	12.25	16	2800	6.5	3/4	3
57-14	140	110	230	44	200	40	14.5	18.5	2800	7	3/4	3
57-15	160	130	265	44	200	45	17.25	21.5	2800	7.5	3/4	3
57-16	180	150	300	44	200	53	19.25	24.5	2800	8	7/8	3
Horizontal cup-base type												
57-21	70	50	120	15	100	14	6.5	11	2800	6	3/4	4
57-22	100	70	160	22	100	22	9.5	14	2800	6.5	3/4	4
57-23	125	95	200	30	200	29	12.25	16.5	2800	6.5	3/4	4
57-24	140	110	230	44	200	40	14.5	20	2800	7	3/4	4
57-25	160	130	265	44	200	45	17.25	22.5	2800	7.5	3/4	4
57-26	180	150	300	44	200	53	19.25	25	2800	8	7/8	4
Horizontal gain-base type												
57-31	70	50	120	15	100	14	6.5	11	2800	6	--	5
57-32	100	70	160	22	100	22	9.5	14	2800	6.5	--	5
57-33	125	95	200	30	200	29	12.25	16.5	2800	6.5	--	5
57-34	140	110	230	44	200	40	14.5	20	2800	7	--	5
57-35	160	130	265	44	200	45	17.25	22.5	2800	7.5	--	5
57-36	180	150	300	44	200	53	19.25	25	2800	8	--	5

NOTES
1 Low frequency test voltage, rms to ground
2 Maximum RIV at 1000kHz, microvolts

Table 2–Neck designation and dimensions

Designation Letter	Diameter (inches)	Groove-Height Relationship as Applicable (inches)	
		Minimum	Maximum
A	1-3/4 ± 1/8	–	–
C	2-1/4 ± 1/8	9/16	7/8
F	2-7/8 ± 1/8	9/16	7/8
J	3-1/2 ± 1/8	1/4	5/8
K	4 ± 1/8	1/4	5/8
N	6 ± 1/8	9/16	7/8

8.2.5 Thermal shock test

Three insulators shall be selected at random and tested for ten complete cycles in accordance with 5.5 of ANSI C29.1. The temperature of the hot water bath shall be approximately 150°F (66°C), and the temperature of the cold water bath shall be approximately 39°F (4°C). If one or more insulators fail, three additional insulators shall be selected at random and tested. Failure of one or more of these additional insulators shall constitute failure to meet the requirements of this standard.

8.3 Quality conformance tests[1]

8.3.1 Visual and dimensional tests

Conformity with 5.2 may be determined by visual inspection. All insulators not conforming to 5.2 fail to meet the requirements of this standard.

Three insulators shall be selected at random from the lot and their dimensions checked against the dimensions on the manufacturer's drawing. Failure of more than one of these insulators to conform, within manufacturing tolerances, to the dimensions on this drawing shall constitute failure of the lot to meet the requirements of this standard.

8.3.2 Porosity test

Specimens shall be selected from insulators destroyed in other tests and tested in accordance with 5.4 of ANSI C29.1-1988. Penetration of the dye into the body of the dielectric shall constitute failure of the lot to meet the requirements of this standard.

8.3.3 Galvanizing test

Three pieces representative of each type of galvanized hardware used with the insulators shall be selected at random and tested in accordance with Section 6 of ANSI C29.1. Five to ten measurements shall be uniformly and randomly distributed over the entire surface. Both the average thickness value for each individual specimen and the average of the entire sample shall equal or exceed the following:

	Average of Entire Sample	Average of Individual Specimen
Hardware (except nuts/bolts)	3.4 mil	3.1 mil
Nuts/bolts	2.1 mil	1.7 mil

[1] Substantial test experience indicated that a total of 1/2 of 1% of the number of insulators in the lot is sufficient to establish characteristics demonstrable by destructive tests. For additional information, reference may be made to the ASTM Manual of Presentation of Data and Control Chart Analysis, 6th Edition 1990 (ASTM Manual Series; MNL7), and further references stated therein. This manual also contains additional information on methods of computation such as those given in 8.3.4.

If the average of one specimen, or if the average of the entire sample, fails to comply with the above, ten additional pieces of the same type of hardware shall be selected at random and tested. Failure of the retest sample to comply with the minimum thickness criteria shall constitute failure of the lot to meet the requirements of this standard.

8.3.4 Cantilever-strength test

Three insulators shall be selected at random and tested in accordance with 5.1.3 of ANSI C29.1. Failure of the average strength of the three insulators to meet the strength requirement given in the applicable figure, or failure of any one insulator to equal 85% of that strength requirement, shall constitute failure of the lot to meet the requirements of this standard.

8.4 Routine tests

8.4.1 Routine flashover test

Each cavity core insulator shall be subjected to a flashover test in accordance with clause 7.1 of ANSI C29.1. For this test, an electrode shall be placed on each side of, and adjacent to, the porcelain barrier. All insulators that puncture fail to meet the requirements of this standard.

8.4.2 Routine cantilever test

Each assembled insulator shall be subjected to a cantilever proof test. The load applied shall be not less than 40% of the rated cantilever strength. The force shall be applied at the Line end, only and shall be repeated for each of the four quadrants. All insulators that fail do not meet the requirements of this standard.

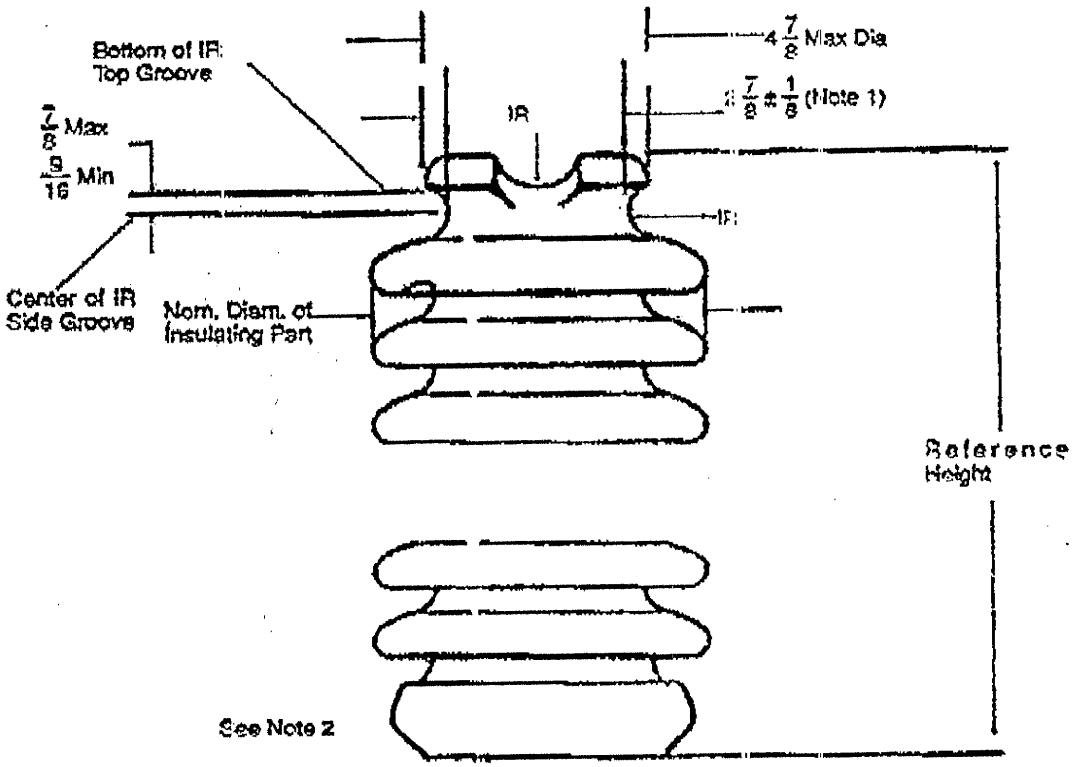

NOTES

1 "F" neck.
2 See figure 9A for base threading.
3 All dimensions are in inches.
4 Top wire groove shall seat a 1-15/16-inch diameter mandrel.
5 Side-wire groove shall seat a 1-15/16-inch diameter mandrel.

Figure 1–Vertical tie-top type–F neck, classes 57-1, 57-2, and 57-3

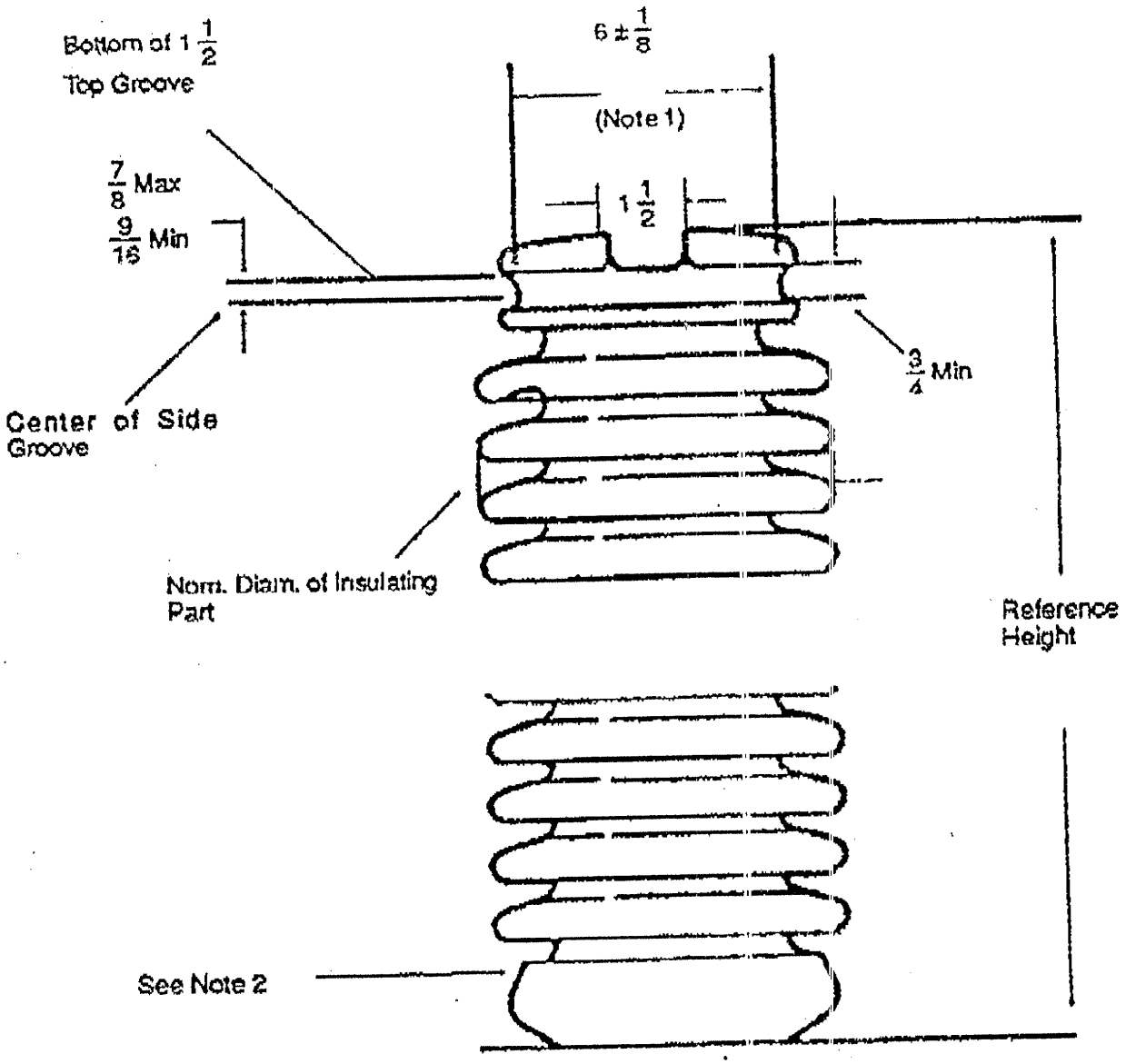

NOTES
1 "N" Neck.
2 See figure 9A for Classes 57-4 and 57-5 base threading and figure 9B for Class 57-6 base threading.
3 All dimensions are in inches.
4 Top-wire groove shall seat a 1-7/1 6-inch diameter mandrel.

Figure 2–Vertical tie-top type–N neck, classes 57-4, 57-5, and 57-6

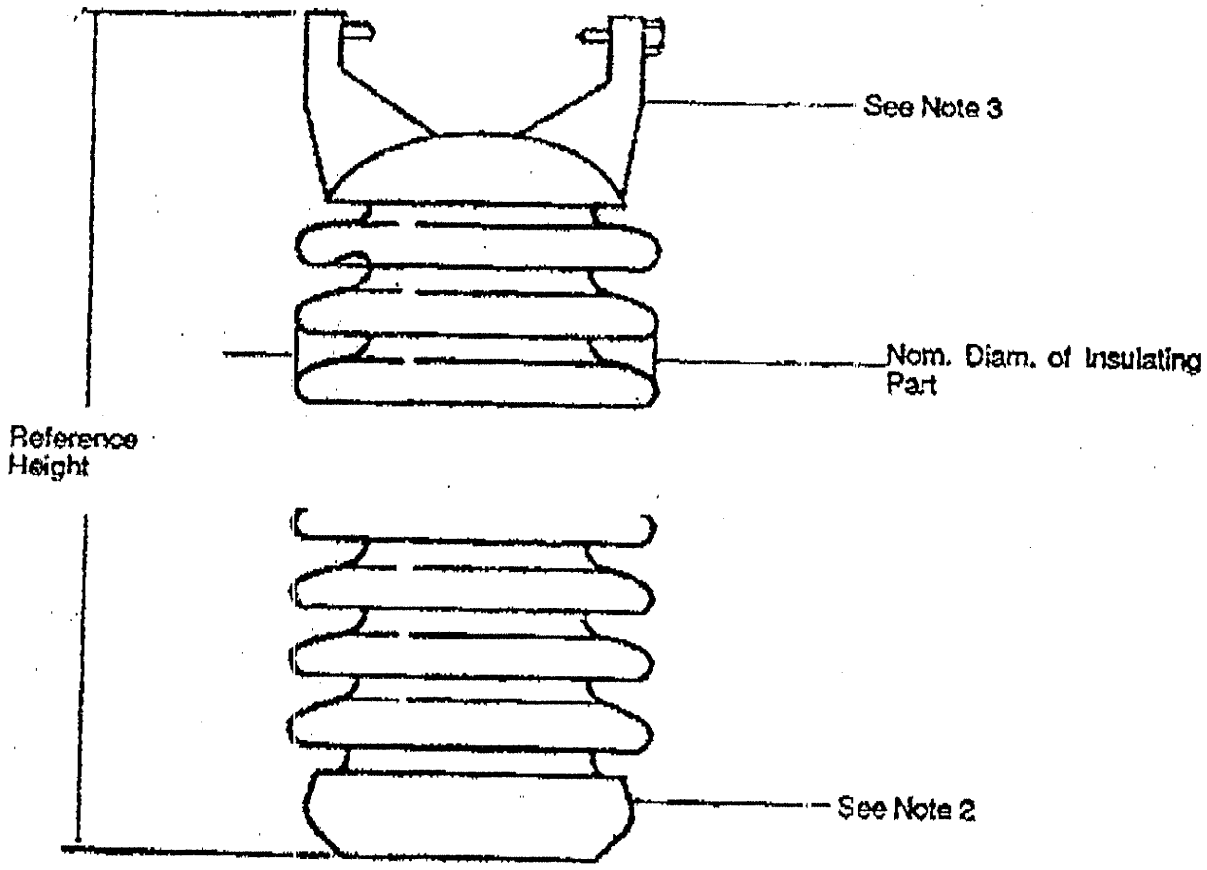

NOTES

1 All dimensions are in inches.
2 See figure 9A for Classes 57-11, 57-12, 57-13, 57-14, and 57-15 base threading and figure 9B for Class 57-16 base threading.
3 See figure 6 for cap dimensions.

Figure 3–Vertical clamp top type, classes 57-11, 57-12, 57-13, 57-14, 57-15, and 57-16

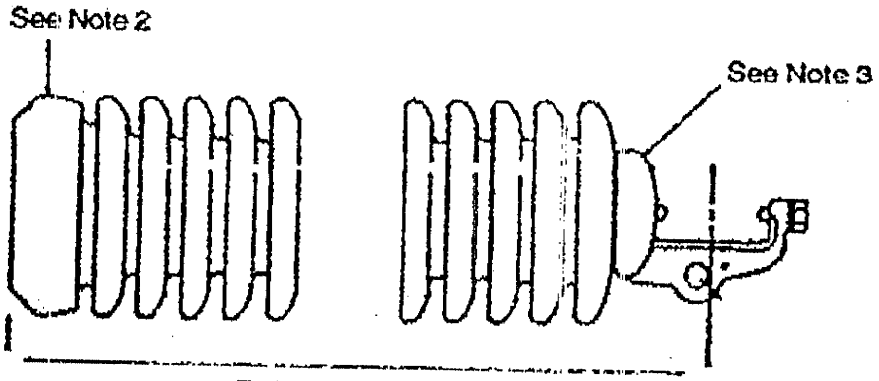

NOTES

1 All dimensions are in inches.
2 See figure 9A for Classes 57-21, 57-22, 57-23, 57-24 & 57-25 base threading and 9B for class 57-26 base threading.
3 See figure 7 for cap dimensions.

Figure 4–Horizontal clamp top-cup base type, classes 57-21, 57-22, 57-23, 57-24, 57-25 and 57-26

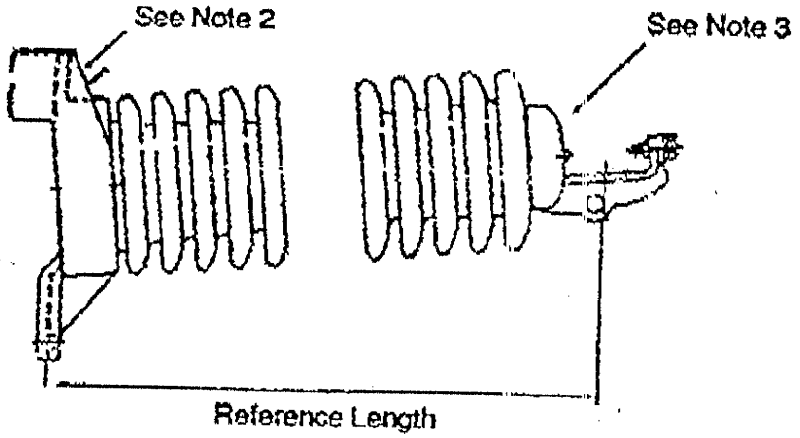

NOTES

1 All dimensions are in inches.
2 See figure 1 for Classes 57-31, 57-32, 57-33, and 57-34 base details and figure 1 10E for Class 57-35 and 57-36 base details.
3 See figure 7 for cap dimensions.

Figure 5–Horizontal clamp top gain base type, classes 57-31, 57-32, 57-33, 57-34, 57-35 and 57-8

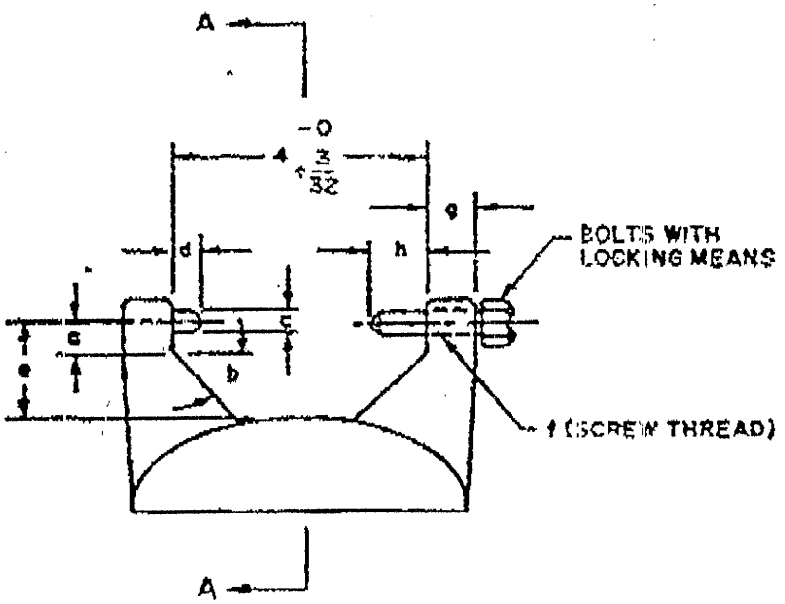

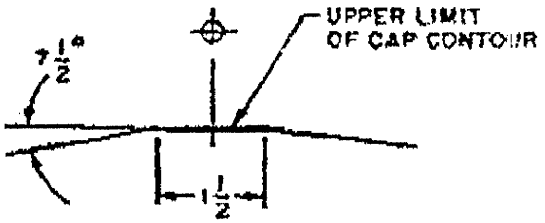

SECTION A-A

Note: All dimensions are in inches.

Dimension	Value
a	(See note 1)
b	(See note 1)
c	15/32 min.(See note 2)
d	11/32 (See note 2)
e	(See note 1)
f	5/8 - 11 + 0.015 UFS
g	(See note 3)
h	1/2 min.

NOTES

1 To be checked by gauge. See figure 8.
2 Maximum to be determined by gauge. See figure 8.
3 The purpose of this standard is to assure interchangeability of clamps. Trunnion bolts of one manufacturer are not necessarily interchangeable with those of another.

Figure 6–Cap dimensions–vertical clamp

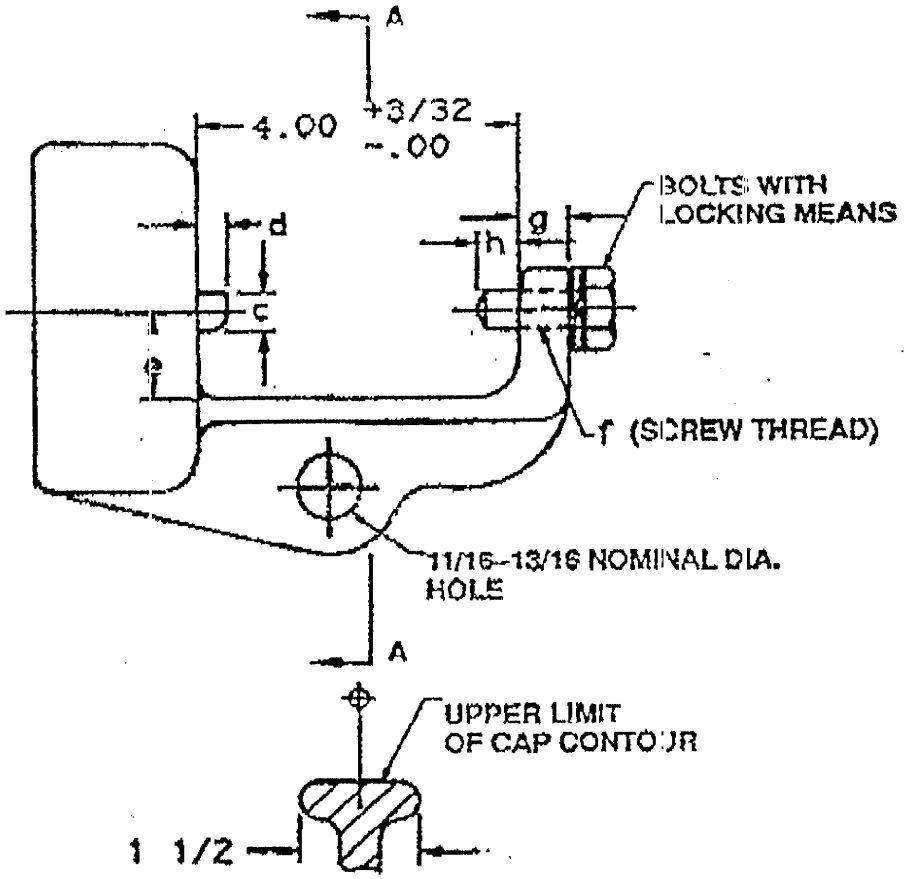

SECTION A-A

Note: All dimensions are in inches.

Dimension	Value
e	15/32 (See note 2)
d	11/32 min. (See note 2)
g	(See note 1)
f	5/8 - 11 + 0.015 UFS
h	(See note 3)
	1/2 min.

NOTES

1 To be checked by gauge. See figure 8.
2 Maximum to be determined by gauge. See figure 8.
3 The purpose of this standard is to assure interchangeability of clamps. Trunnion bolts of one manufacturer are not necessarily interchangeable with those of another.

Figure 7–Cap dimensions–horizontal clamp

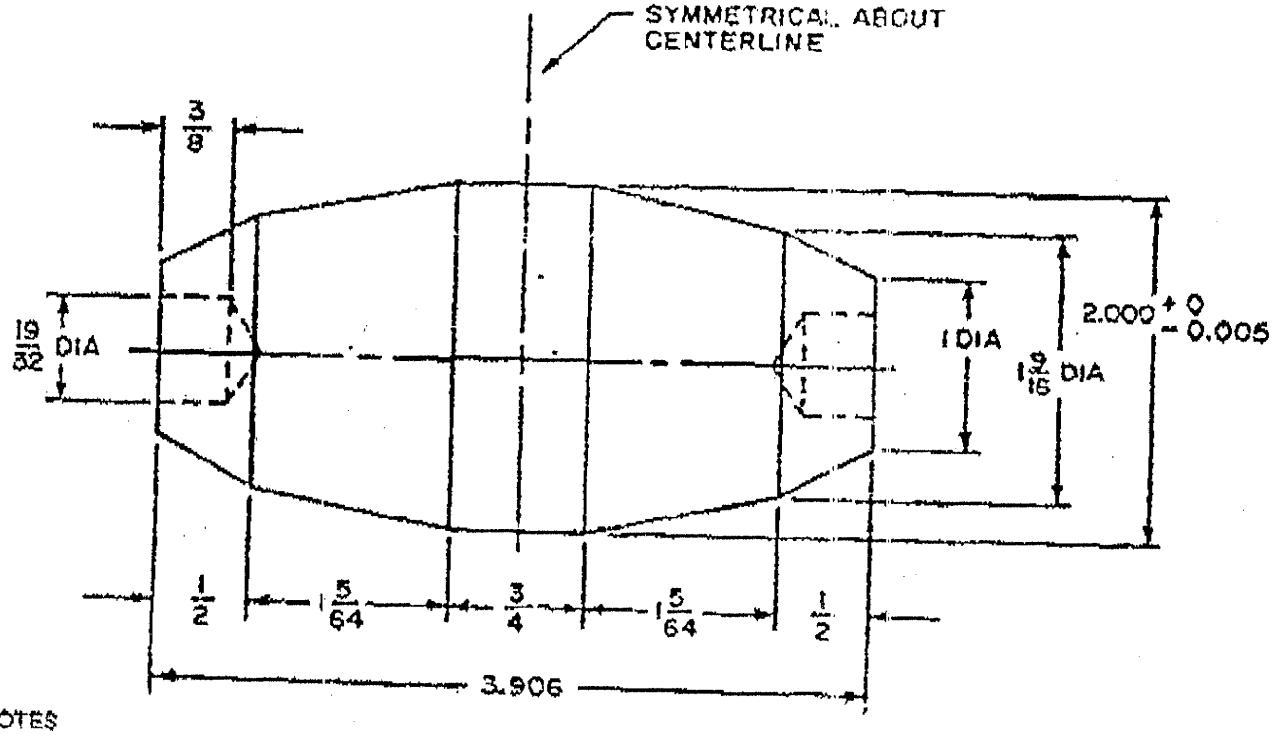

NOTES

1 All dimensions are in inches.
2 Tolerance of ± 0.002 inch, except as shown.

Figure 8–Cap gauge