The Modular Field Kitchen (MFK)

With its modular structure, the MFK is a trailer cooking system capable of adjustment to the cooking habits of any user group in field operation around the world. It is characterized by the features described below:

High degree of system equipment modularity – customized trailer cooking systems

The special feature of the MFK is that the four free modular slots on the off-road single-axis trailer can be freely configured to customer requirements. This allows a wide variety of cooking styles to be catered for depending on country-specific dietary habits. Alongside a wide number of different cooking modules, there are also "refrigeration" and "deep freeze" function modules available, as well as a stowage module. If required instead of the four MFK units up to four Multi Cooking Modules (see Chapter IV) can be transported on the trailer of the MFK (optional equipment required). The wide choice of modules and the four free module slots on the trailer make for a wide variety of different equipment configuration options for the MFK.
The different modules, which can also be operated as free-standing units without the MFK trailer (requires optional accessories), are described in more detail below. For this reason, at this point "only" the general features and benefits of this trailer cooking system will be described.

Wide-ranging possibilities – one basic concept

The basic concept described in the following is based on the premise that four modules are transported and operated on the off-road single-axis trailer, which was designed specifically for the MFK. In this case, the basic equipment comprises in the main a single-axis off-road chassis with integrated weather protection including side tarpaulins, two detachable trailer side compartments which can be used for stowing and as a work surface during operation (high-grade stainless steel surface), the chimney module and four individually exchangeable modules per trailer.
By leaving off the weather protection and adding a special cover tarpaulin and an attachment kit for angling the chimney, the trailer can also be used only for transportation of the modules and the two side compartments / for cooking within an external enclosure. During cooking operation, it is essential to ensure adequate ventilation and extraction (e.g. chimney breakthrough in the tent roof).

High capacity – supply reliability

Depending on the equipment configuration, the MFK is suitable for cooling a complete menu for up to 250 people per meal. For emergency relief operations, depending on the equipment configuration up to 800 personnel can be fed per sitting with simple dishes such as hotpot. Fresh foods as well as durable and long-life supplies can be prepared.

Durable – for action around the world

The MFK is highly mobile and suitable for travel on roads and also on prepared forest paths and off-road routes subject to adjusted travel speed. The height-adjustable towbar and exchangeable towbar eyes allow the trailer to be towed by military as well as civilian vehicles. To safeguard the power supply to the trailer lighting, a 15-pin plug is attached. For connection to different towing vehicles, the electrical connection can be made using different adapter cables. For transportation purposes, the MFK is fitted with an integrated weather protection facility for the trailer. The weather protection comprises a roof frame with side tarpaulins and a roof tarpaulin, which simultaneously provides protection during transport and when erected, shelter from the weather when in use. Raising the side tarpaulins is simple for a single person alone due to the use of compression gas springs. This creates a type of all-round awning. Under the roof tarpaulins (roof skin), a detachable non-woven fabric grease catcher is stretched over the four cooking units which prevents condensation and grease dripping back into the units. The illustration on page 25 shows the MFK in operation with opened weather protection roof and four cooking modules. Two lateral weather protection tarpaulins can be suspended on the raised side tarpaulins (optional accessory) of the weather cover if required without the need to use tools. This allows a completely enclosed tent to be constructed around the field kitchen. In this way, in order to comply with hygiene requirements during cooking, optimum protection can be provided against the effects of weather and vectors (e.g. insects, rodents). The working height for cooking with the TFK is configured so as to comply with all types of varying work ergonomics requirements.

Safe and energy efficient

The chimney module is required for the discharge of flue gas during operation of the MFK, and is already integrated into the chassis of the single-axis trailer. The cooking modules are loaded onto the trailer in such a way that they are directly connected to the chimney unit. Underneath the cooking modules are the drawer compartments for the energy-efficient burner systems. In analogy to the TFK 250, a fast, comprehensive catering service is ensured anywhere around the world by the efficient supply of heat combined with a very large storage and work surface area. For the most suitable Futuretech burner system to be used in the MFK, please refer to Chapter III.

1 Cooking module single-walled

2 Cooking module double-walled

Fast commissioning

The design and execution have been carefully thought through to the last detail, ensuring that the MFK can be made ready for operation after reaching the deployment location within just 30 minutes by a single person.

Futuretech's many decades of experience in the field have shown that for longer-term deployment (appr. longer than a week), trailer cooking systems should be integrated into an existing infrastructure with an intact power supply (230 V), water supply, waste water disposal, storage facilities for food, cleaning and rinsing facilities and disposal facility for food and other waste.

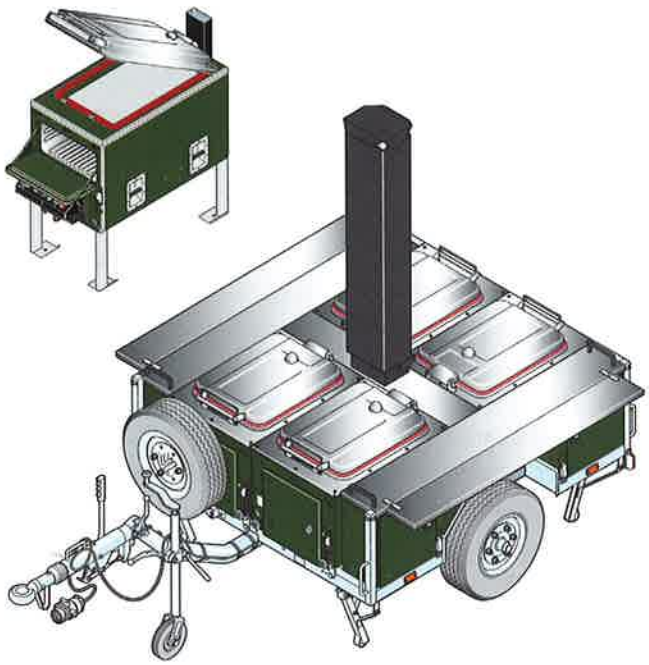

Customer benefits of the MFK

- Modular design for flexible application and wide country-specific meal preparation versatility
- Simple, fast transport
- High degree of mobility due to compact dimensions
- Operation of modules on the trailer and also set up separately
- Application possible in remote and difficult terrain
- Large work surface
- Extremely hygienic (use of stainless steel)
- Fast, simple cleaning

Technical data MFK

- Transport dimensions (L x W x H): 4285 – 4405 x 2070 x 2650 mm
- Operating dimensions (L x W x H): 5500 – 5665 x 4500 x 2650 mm
- Admissible total payload 2000 kg
- Operating voltage: 24 V, alternatively 12 V
- Cooking processes: by individual customer specification, depending on chosen cooking module equipment
- Capacity: up to 250 menus, up to 800 simple dishes per meal

Scope of delivery of the MFK

- Trailer, single-axis, off road suitability Transportation or additionally for cooking
- Transport tarpaulin or weather protection with optional side tarpaulin
- Selection of max. 4 different modules (see sep. table)
- Up to 4 burners (optional – number and type depending on application, see Chapter III.)
- Solid fuel burner (optional)
- Optional cooking accessories and foot transport containers

Modules (individual equipment) MFK

- Pressure cooking module 125 l, double-walled
- Cooking module 125 l, single-walled
- Cooking module 125 l, double-walled
- Frying module 70 l
- Frying-baking module 25 l / 78 l
- Combi-Steamer KCS 15 MF
- Refrigeration module 400 l
- Deep freeze module 400 l
- Stowage module

Focus on modularity – the different MFK modules

All the modules have the same area dimensions (length and width), ensuring convenient transport and operation on the trailer of the MFK. Alongside different cooking modules, a range of additional supplementary modules are available. The supplementary modules are refrigeration and deep freeze units and also a stowage module. The stowage module can be used for the secure storage of accessories or other equipment components. Its stainless steel surface allows its use as a hygienic extension to the work surface. Apart from the "Combi Steamer", "refrigeration" and "deep freeze" modules, all the modules are the same height. A more detailed description of the individual modules is provided in the following.

Cooking modules

All the cooking modules described in the following are designed and constructed for self-sufficient operation. The cooking modules are transportable and can be either used in the MFK or as stand-alone cooking units. There are carrying handles provided at the side and front of all the cooking modules apart from the Combi Steamer, which permit manual transport over short distances. The modules have four integrated telescopic legs which permit simple set-up, alignment and operation of the module on any kind of terrain. For safe, ergonomical working even on uneven terrain, the telescopic legs can be individually height adjusted.
Apart from the Combi Steamer, the cooking modules can be purchased with different Futuretech burner systems. One burner from Futuretech is required for operation of the modules (see also Chapter III). For operation of the modules, an exhaust gas discharge must be guaranteed. If the pressure cooking module is operated on the MFK trailer, then exhaust gas discharge is guaranteed by the chimney mounted on the chassis.
When operating as a stand-alone cooking module, an optional exhaust gas pipe must be mounted as a mandatory requirement. Steps must also be taken to ensure sufficient ventilation and exhaust gas discharge. The rounded corners of the cooking module and their seamless design permit convenient and complete cleaning using a minimum of time and resources. The cleaning concept consequently complies even with the stringent hygiene requirements set out by the HACCP-concept.

1 Pressure cooking module 125 l, double-walled

The double-walled pressure cooking module 125 l permits a wide number of different cooking methods such as pressure cooking, boiling/simmering, blanching/poaching, stewing and steaming, making it ideal primarily for the preparation of hot water, thickened soups, hotpot, rice, potatoes, pasta, pulses and couscous.
Pressure cooking allows cooking times to be reduced by 50% compared to a standard cooking module, and also helps to conserve fuel. Not only energy consumption but also water consumption can be significantly reduced by pressure cooking, while important vitamins and nutrients as well as taste are retained. The double wall is partially filled with water which turns to steam when heated and transfers the heat from the burner to the food. This indirect heating method also ensures even heating of the cooking module, preventing the food from burning. The double-walled pressure lid is designed to reliably release pressure in case of an inadmissible pressure build-up, ensuring maximum safety for operating personnel. As it is required to withstand a high level of pressure, it is manufactured using high-strength materials.

2

The drainage valve integrated in the cooking module simplifies and speeds up the cleaning process, as waste food does not need to first be scooped out. This can be simply dismantled for daily cleaning without the need to use tools.

2 Cooking module 125 l, single-walled

The single-walled cooking module 125 l permits a wide number of different cooking methods such as boiling/simmering, blanching/poaching, stewing, steaming, frying and braising, making it ideal primarily for the preparation of hot water, clear soups and pasta, and for browning large pieces of meat. The single-walled module works on a direct heating principle, for cooking methods requiring fast, high levels-heat.
The drainage valve integrated in the cooking module simplifies and speeds up the cleaning process, as waste food does not need to first be scooped out. This can be simply dismantled for daily cleaning without the need to use tools.

3 Cooking module 125 l, double-walled

The double-walled cooking module 125 l permits a wide number of different cooking methods such as boiling/simmering, blanching/poaching, stewing and steaming, making it ideal primarily for the preparation of hot water, thickened soups, hotpot, rice, potatoes, pasta, pulses and couscous.
The double wall is partially filled with water which turns to steam when heated and transfers the heat from the burner to the food. This indirect heating method also ensures even heating of the cooking module, preventing the food from burning.
The drainage valve integrated in the cooking module simplifies and speeds up the cleaning process, as waste food does not need to first be scooped out. This can be simply dismantled for daily cleaning without the need to use tools.

4 Frying module 70 l

The frying module 70 l permits a wide number of different cooking methods such as boiling/simmering, blanching/poaching, stewing, steaming, braising, frying and deep frying, making it suitable primarily for cooking roasts and cuts of meat for quick frying such as steaks. The frying kettle with integrated compensating base and maintenance-free piping system for heat transmission ensures that the heat is evenly distributed over the entire base of the frying module. This prevents a rapid drop in temperature when cold meat is placed on the base for frying, and also ensures energy-efficient browning without spoiling the meat.

5 Frying/baking module 25 l/78 l

The frying/baking module 25 l/78 l is a combination of a frying module with a volume of 25 l and an oven with a 78 l capacity. The frying/baking module 25 l/78 l permits a wide number of cooking methods such as boiling/simmering, blanching/poaching, stewing, steaming, braising, frying, baking and keeping food hot. It is particularly suitable for the simultaneous cooking of roasts and quick frying meat cuts such as steaks in the frying module, and for baking bread and pizza in the baking module. Simultaneous working on two levels allows the preparation of large quantities of food, for example steaks can be fried and then placed in the oven to keep warm. The frying unit is a single-walled container with integrated compensating base for even and fast heat distribution and a maintenance-free piping system for heat transmission, ensuring that the heat is evenly distributed over the entire base area of the frying kettle. This prevents a rapid drop in temperature when cold meat is placed on the base for frying, and also ensures energy-efficient browning without spoiling the meat. The frying module and the oven are heated simultaneously by one burner.

5

Technical data frying/baking module 25 l/78 l

Dimensions L x W	1100 x 700 mm
Height without extended telescopic legs	695 mm
Height with extended telescopic legs	980 mm
Weight without burner	appr. 165 kg
Nominal capacity	25 l/78 l

Technical data pressure cooking module 125 l, double-walled

Dimensions L x W	1100 x 700 mm
Height without extended telescopic legs	695 mm
Height with extended telescopic legs	980 mm
Weight without burner	appr. 175 kg
Nominal capacity	125 l

Technical data cooking module 125 l, single-walled

Dimensions L x W	1100 x 700 mm
Height without extended telescopic legs	695 mm
Height with extended telescopic legs	980 mm
Weight without burner	appr. 105 kg
Nominal capacity	125 l

Technical data cooking module 125 l, double-walled

Dimensions L x W	1100 x 700 mm
Height without extended telescopic legs	695 mm
Height with extended telescopic legs	980 mm
Weight without burner	appr. 125 kg
Nominal capacity	125 l

Technical data frying module 70 l

Dimensions L x W	1100 x 700 mm
Height without extended telescopic legs	695 mm
Height with extended telescopic legs	980 mm
Weight without burner	appr. 130 kg
Nominal capacity	70 l

The Combi Steamer KCS 15 MF

The new KCS 15 MF Combi Steamer is a mobile all-rounder. Its development has new standards in the field of mobile Combi-Steamers. This totally innovative system is an unprecedented combination of cost effectiveness with mobility, independence from energy sources and excellent kitchen technology. The KCS 15 MF combines the function of a steamer with that of a fan oven. An exceptionally broad control range for humidity and temperature ensures an excellent cooking climate and gentle preparation of foods, resulting in minimal loss of food weight. Thanks to the multi-fuel burner technology used, the heat in the cooking chamber can be generated independently of the energy source (kerosene, diesel or petrol). There is currently no mobile device in this performance category which can prove lower energy consumption. An innovative, highly efficient heat exchanger works together with the demand-optimized supply of energy to ensure extreme energy and cost savings. The KCS 15 MF can naturally be operated using a conventional 230 V connection, meaning that even a small power generator with an output of 1.5 kVA will be sufficient for operation.

The slender design of the unit creates ideal conditions for mounting on different mobile platforms. Thanks to its narrow design with a width of just 700 mm, the Combi Steamer also easily passes through any doorway. Because of its compact dimensions, the KCS 15 MF can be used where space is at a premium, making it ideal for use on the MFK or as a free-standing cooking module. Its intelligent control technology (including non-contact screen, pre-programmed cooking and recipe book) allows the Combi Steamer to deliver perfect menus to the table without the need for complex programming processes: Air speed, temperature, cooking time or cooking chamber climate require practically no additional regulation.

Technical data Combi Steamer KCS 15 MF

Dimensions W x H	700 x 1500 mm
Depth in operation	1010 mm
Depth during transport	935 mm
Weight	appr. 255 kg
GN insert levels	15 according to DIN 18866
Heating capacity	18 kW
Connected load	1.1 kW, 10 A, 1-phase
Supply voltage	230 V, 50/60 Hz
Sound pressure level	58 dB (A) at distance of 1 m
Water supply	R ½"
Water supply pressure	1 -10 bar (0,1 – 1 MPa)
Water outlet	dia. 20 mm

Operating modes of Combi Steamer KCS 15 MF

Steaming	Cooking in an atmosphere saturated with water vapour typically at 100 °C, but also between 50 °C and 110 °C.
Circulating hot air	Cooking in a hot air atmosphere without additional steam supply between 50 °C and 250°C
Combined steam/hot air	Combination of the two above operating modes between 50 °C and 180°C
Special modes	Core temperature-controlled food preparation Gentle-action cooking Delta-T cooking Low-temperature cooking Regeneration of chilled food