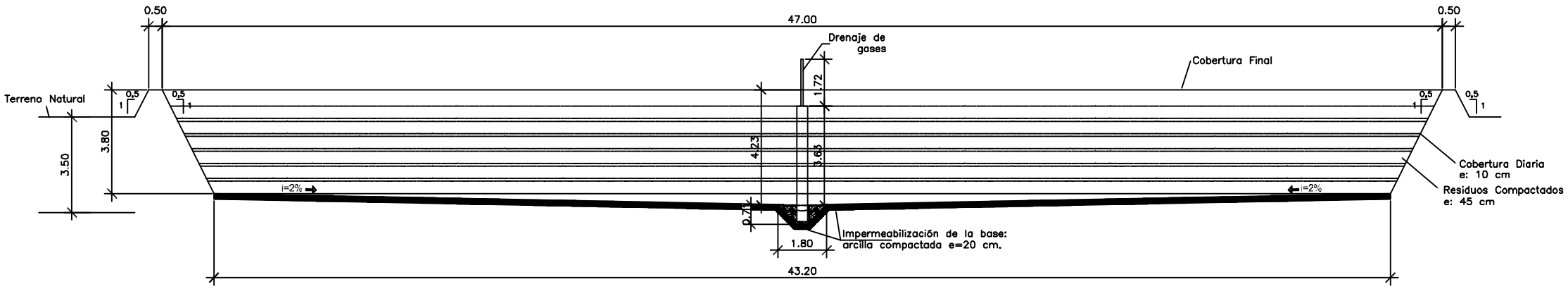

Zanja Tipo - Corte B-B

ESCALA: 1 / 200

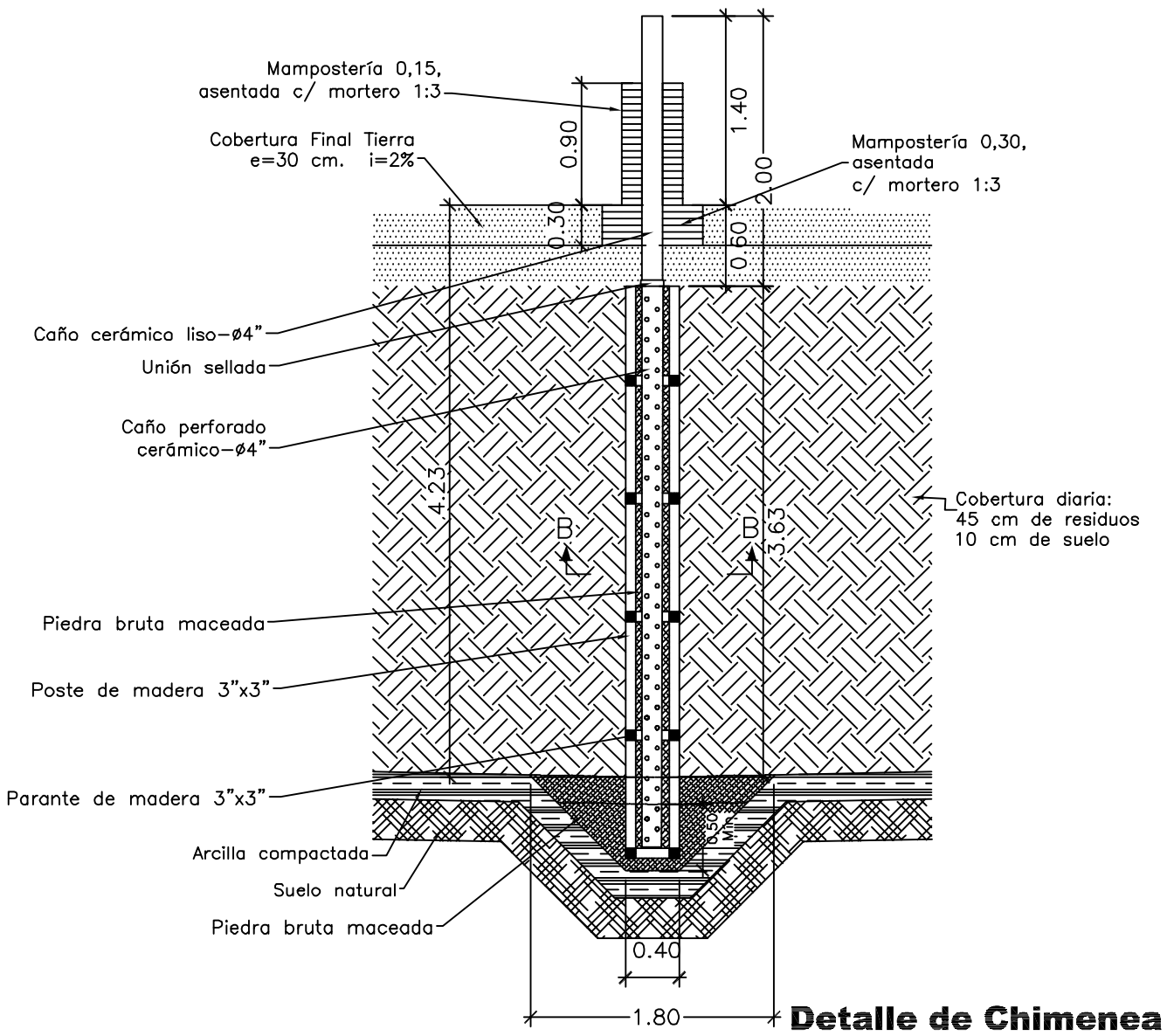

Detalle de Chimenea

ESCALA: 1 / 50

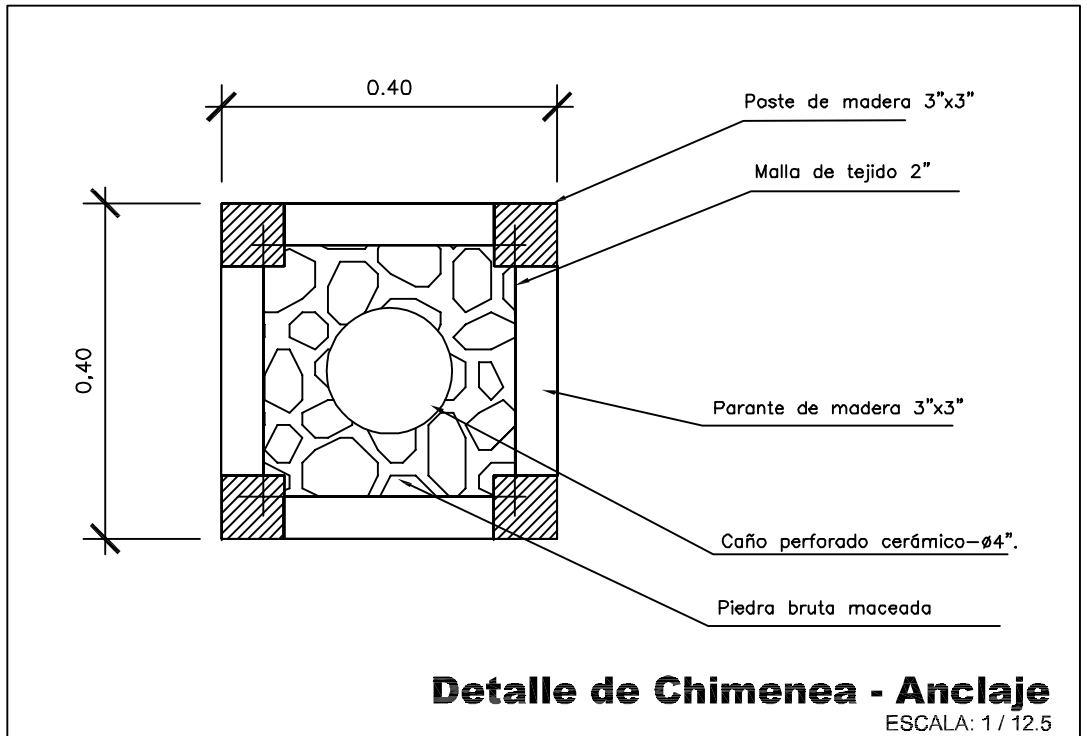

Detalle de Chimenea - Anclaje

ESCALA: 1 / 12.5

MUNICIPALIDAD DE YAGUARON

You created this PDF from an application that is not licensed to print to novaPDF printer (http://www.novapdf.com)