AM/04

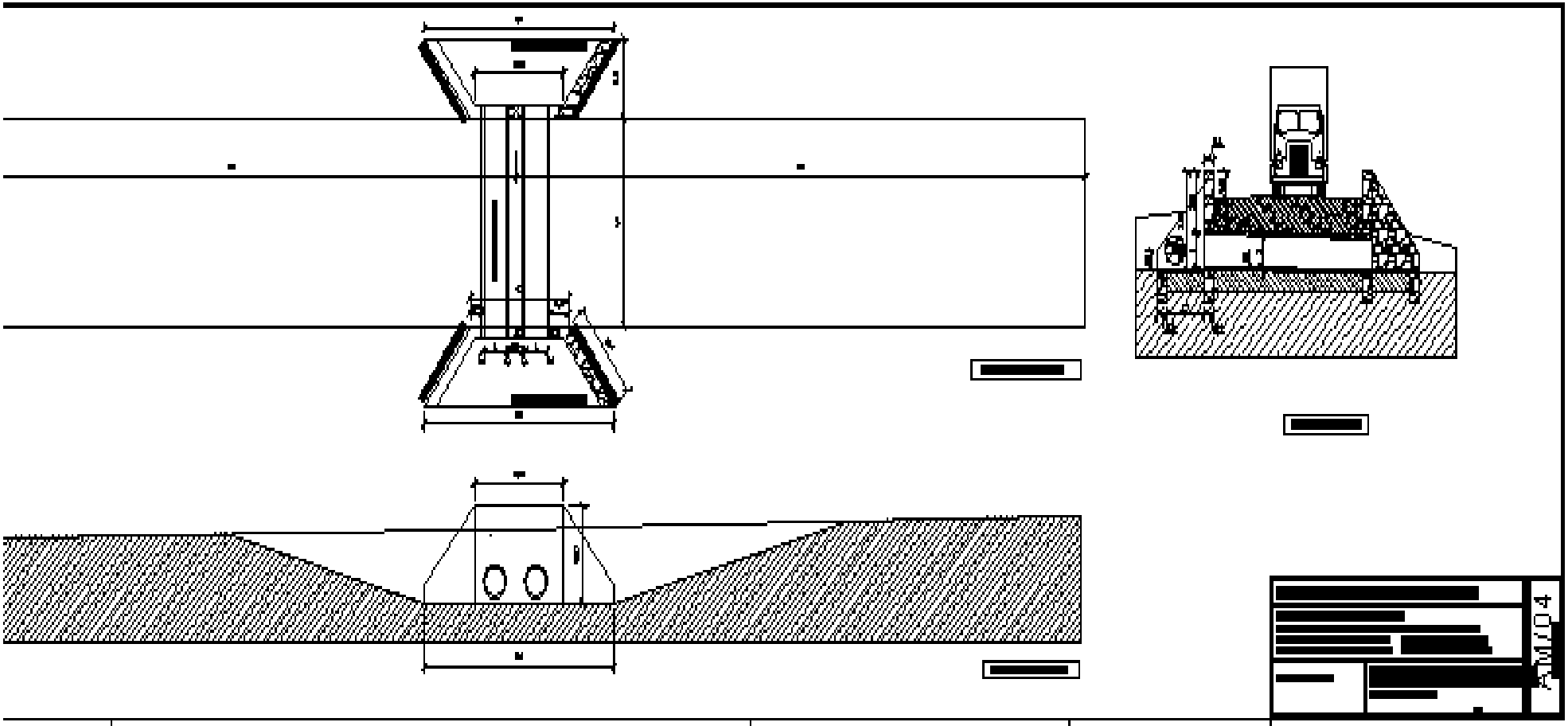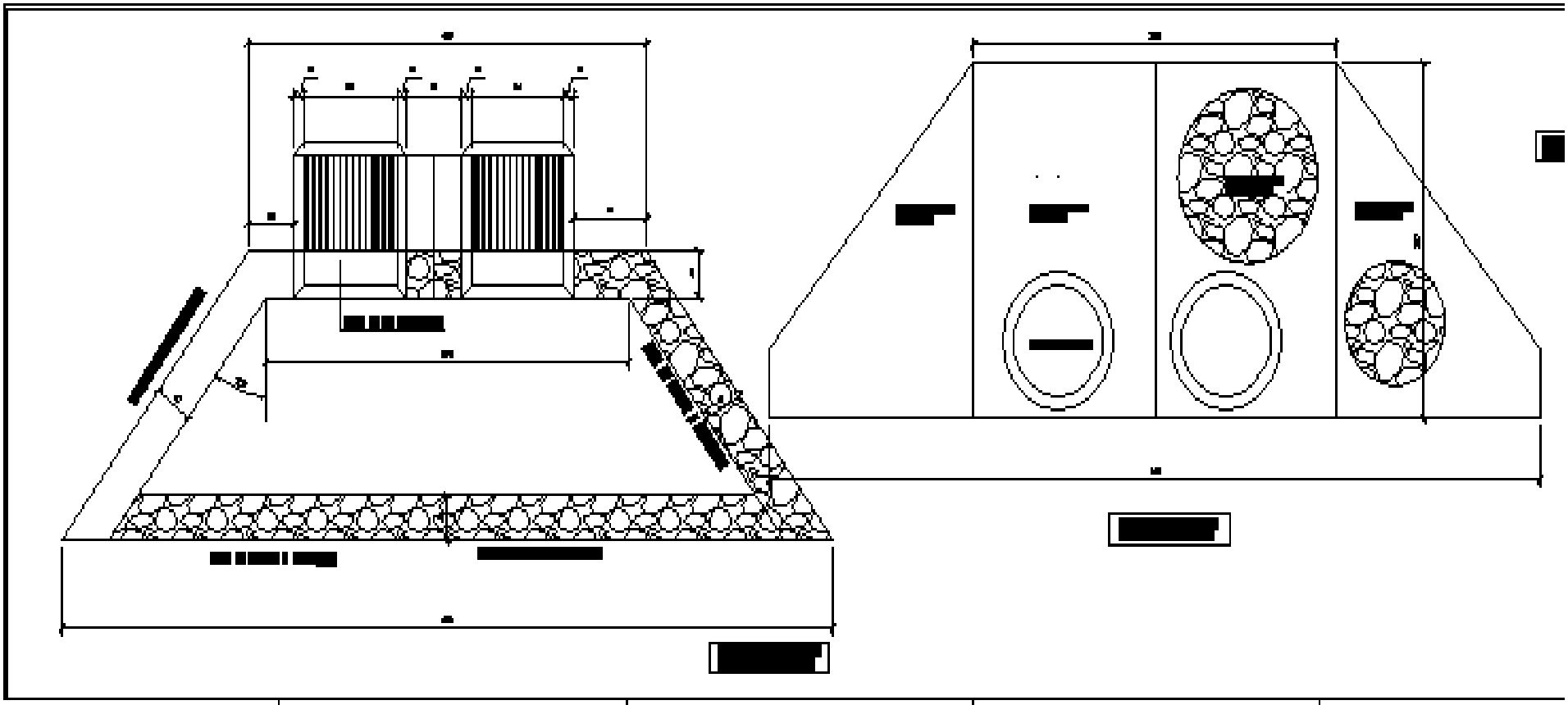
PM104